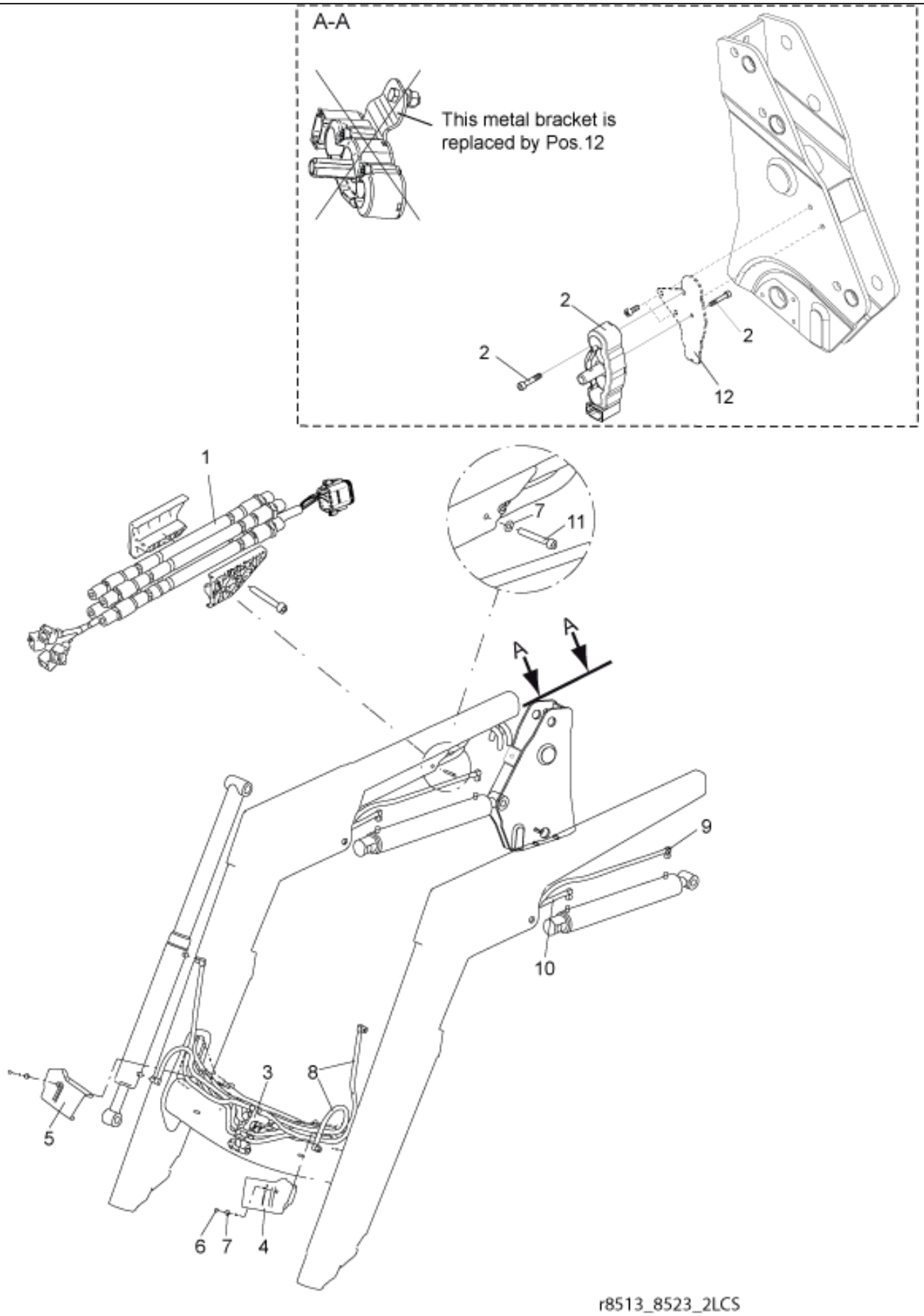
A-A
This metal bracket is
replaced by Pos.12
2
2
2
12
1
7
11
A
A
9
10
3
8
5
6
7
4
r8513_8523_2LCS

© 2025 Jost

Part assemblies Hydraulics LCS

PartNo	Pos	Qty	Name	Specifications
9032579	1	1 PCS	Main hose kit	Replaces 9031648
5034234	2	1	Parking support kit	Replaces 5034233, 5033972
10550258	3	1	Compact valve	7332743
5220601	4	1	Hose clamp LH	
5220603	5	1	Hose clamp RH	
5011910	6	2	Nut	
5013101	7	3	Washer	BRB 8,4 x 16
9032603	8	4 PCS	Hose	3/8" L=900mm (9031142)
9032532	9	2 PCS	Hose	3/8" L=2880mm (9031135)
9032523	10	2 PCS	Hose	3/8" L=2270mm (9031125)
5005128	11	1	Screw	MC6S 8x60
5034122	12	1 PCS	Bracket	

© 2025 Jost