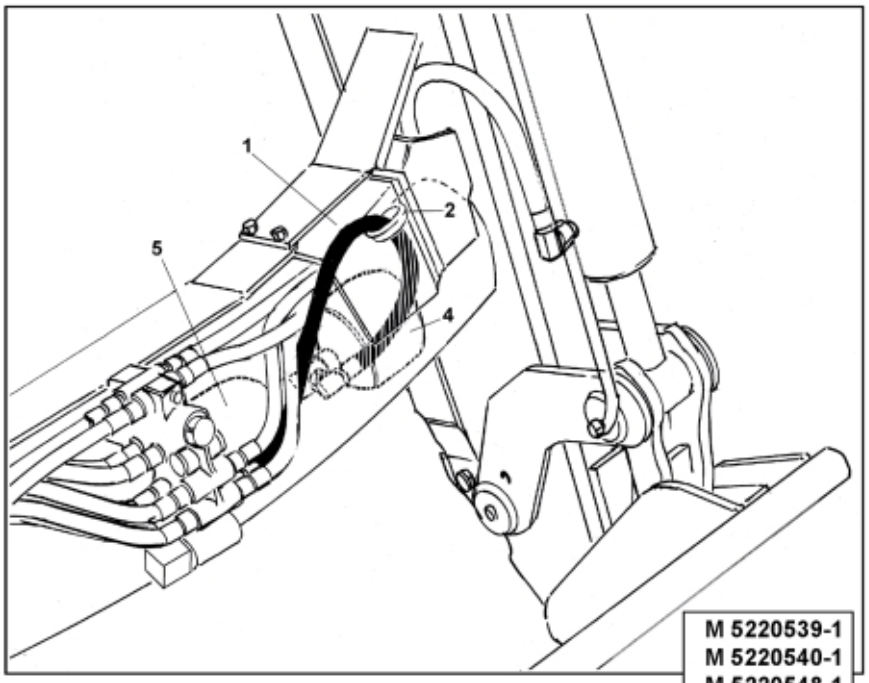

M 5220539-1
M 5220540-1
M 5220548-1
M 5220549-1
M 5220587-1

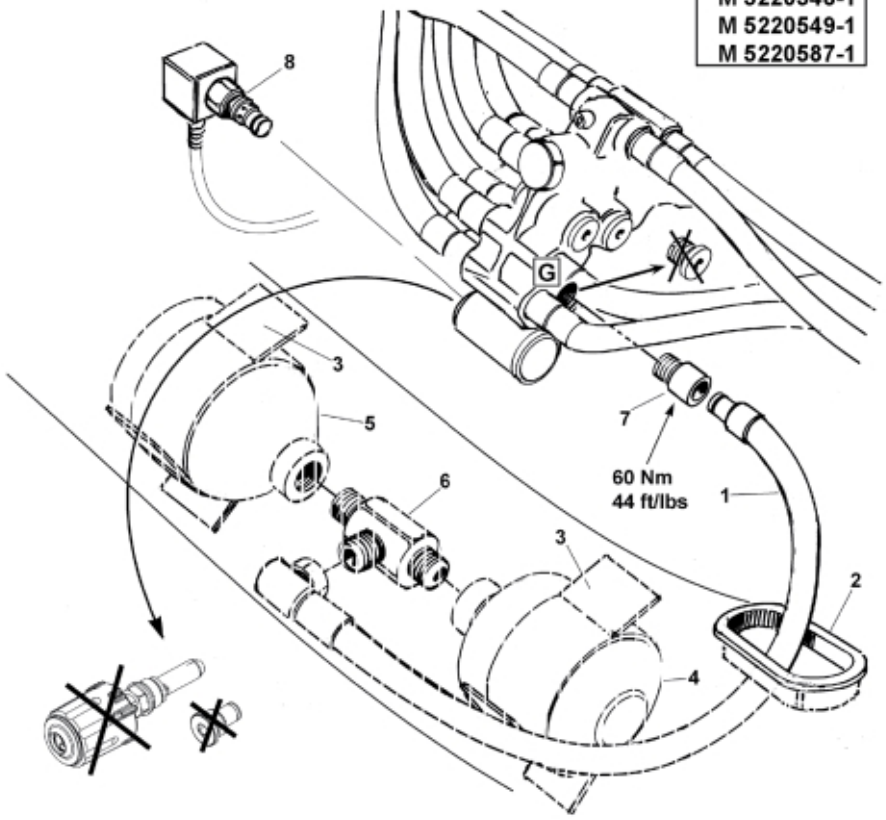

© 2025 Jost

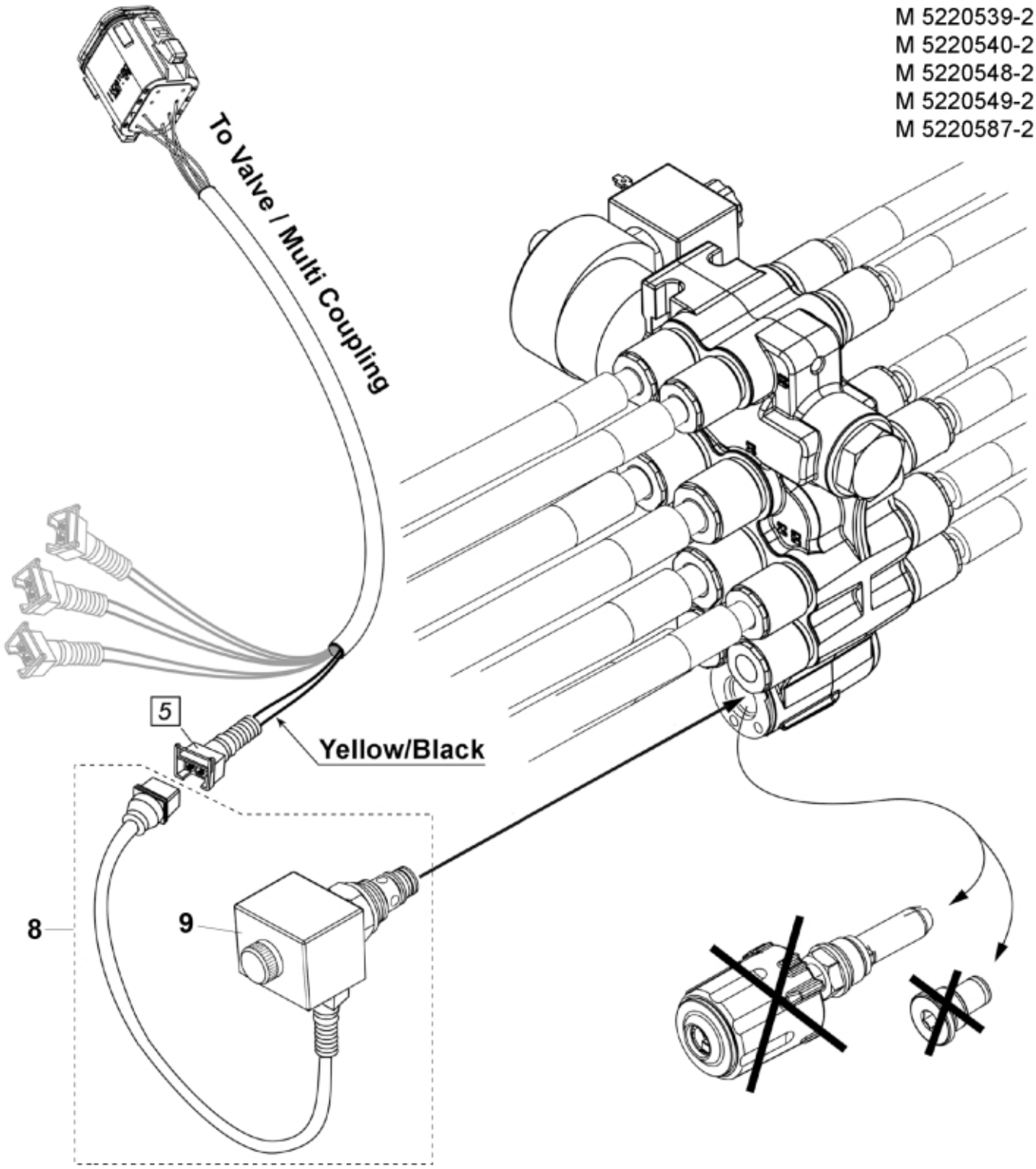
M 5220539-2
M 5220540-2
M 5220548-2
M 5220549-2
M 5220587-2
To Valve / Multi Coupling
5
Yellow/Black
8
9

© 2025 Jost

Description	2 acc
Part assemblies	Suspension El.
Specification	Serial number to: 7332743

PartNo	Pos	Qty	Name	Specifications
5220549		1 PCS	Suspension El.	7332743
9031147	1	1	Hose	3/8" L=800mm
5215111	2	1	Edge cover	
5215012	3	2	Bracket	
5033773	4	1	Accumulator	0,5L/22Bar
5033773	5	1	Accumulator	0,5L/22Bar
11120516	6	1	T-Adapter	
9031324	7	1	Coupling	3/8"
10550264	8	1 PCS	Valve cpl.	
60062558	9	1 PCS	• Coil	
5045140		2	Accumulator	
5220526		1 PCS	Shut off	
5033621		10	Cable tie	4.6x150

© 2025 Jost