

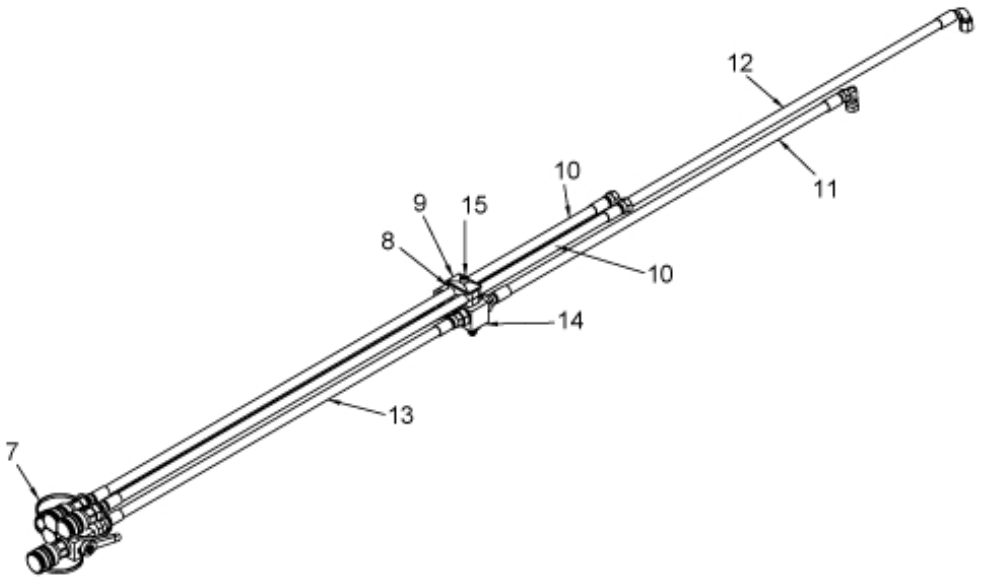

r903170x

© 2025 Jost

Part assemblies Main hose kit

PartNo	Pos	Qty	Name	Specifications
5034110	1	1	Shut off	3/4" JIC
5028051	2	1	Adaptor	UNF 9/16 -18 JIC 37° female 90°
5028078	3	2	Adaptor	3/4" ORB -3/4" JIC
5028118	4	2	Adapter short cpl.	9/16" UNF JIC
5028119	5	2	Adaptor	JIC 9/16 UNF 3/4
5044973	6	4	Quick Coupling	ISO-A Coupling 3/8"
5034111	7	4	Dust Cover	ISO 3/8"
5221576	8	1 PCS	Hose clamp	
5221582	9	1 PCS	Washer	
9031700	10	2 PCS	Hose	3/8" L=3040mm
9031712	11	1	Hose	3/8" L=3860mm
9031716	12	1	Hose	3/8" L=4280mm
9031724	13	2 PCS	Hose	3/8" L=850mm
10550409	14	1 PCS	Valve block	
20701650	15	1	Screw	MC6S 8x40, 701650

© 2025 Jost