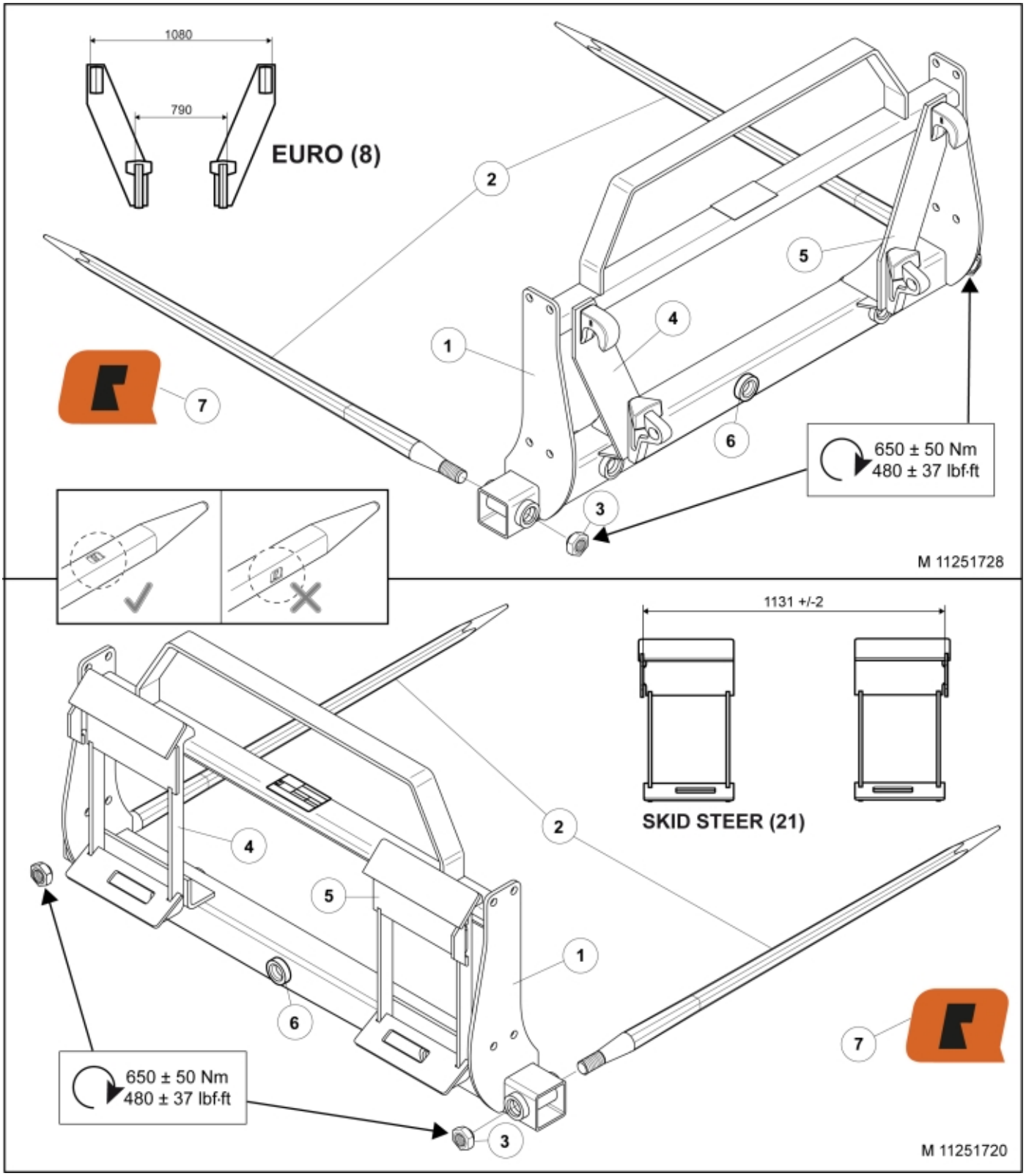
1080
790
EURO (8)
1
2
3
4
5
6
7
650 ± 50 Nm
480 ± 37 lbf·ft
M 11251728
1131 +/-2
SKID STEER (21)
650 ± 50 Nm
480 ± 37 lbf·ft
M 11251720


© 2025 Jost

| | |
|---|---|
| **Description** | Euro |
| **Part assemblies** | Bale fork M 140 Euro with backstop |
| **Specification** | Year From: 1/1/2003 12:00:00 AM |

| PartNo | Pos | Qty | Name | Specifications |
|---|---|---|---|---|
| 11251728 | | | Bale fork M 140 Euro with backstop | 1/1/2003 12:00:00 AM |
| 11251718 | 1 | 1 PCS | Frame cpl. | |
| 5068120-17 | 2 | 2 | Tine with nut | L=1240mm (5068004) |
| 5068116 | 3 | 1 | • Nut | Conus 2 |
| 830556 | 4 | 1 | Implement hook LH | Euro |
| 830557 | 5 | 1 | Implement hook RH | Euro |
| 1209699 | 6 | 2 | Sleeve | |
| 60049053 | 7 | 2 | Decal | "Q" small 80x57 |


© 2025 Jost