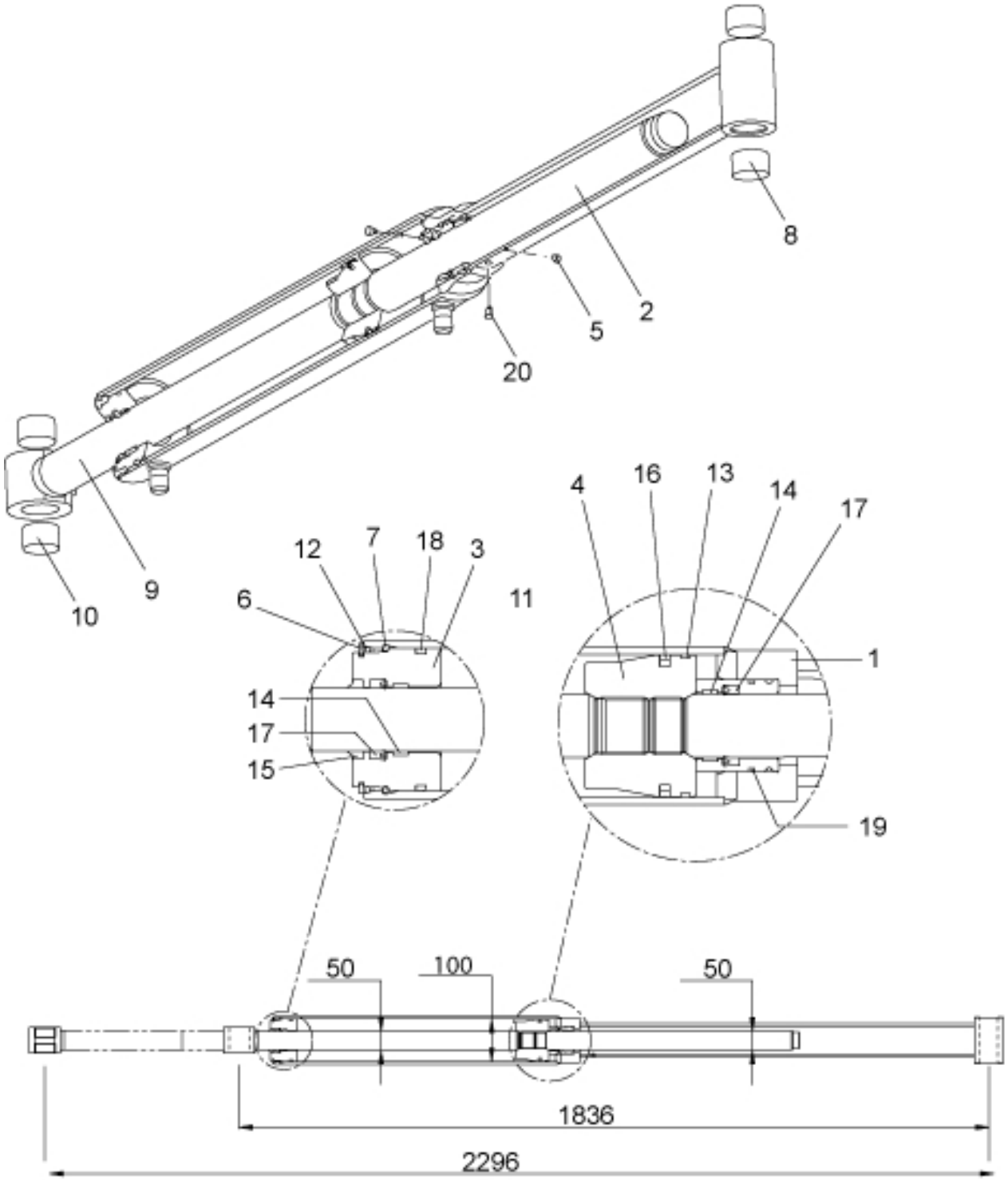

r12715910

© 2025 Jost

Description	100/50/50
Part assemblies	Tilt Cylinder
Specification	Specification: Glossy Black

PartNo	Pos	Qty	Name	Specifications
12700317	1	1 PCS	Guide	
12700022	2	1 PCS	Rear rod	
12710011	3	1 PCS	Bearing	
12710012	4	1	Piston	
5005983	5	2	Stop screw	S6SS M6x16
5016624	6	1	Retaining ring	
5016677	7	1	Retaining ring	
5018514	8	2	Bushing	D35 L=20
12715923	9	1	Piston rod cpl.	
5018513	10	2	• Bushing	D40 L=20
5040071	11	1	Seal kit	100/50/50
5037265	12	1	O-ring	91,6 x 3,53
5040018	13	1	Guide ring	100/95 x 5,5
5040011	14	2	Guide ring	50/55 x 9,7
5038104	15	1	Wiper	50/60 x 7/10
5040028	16	1	Piston seal	100/84,5 x 6,3
5038256	17	2	Seal	50/60 x 10
5039008	18	1	Seal kit	100 x 93,8 x 6,9
5039003	19	1	Cover seal	70 x 64,6 x 6,2
5022095	20	1	Plug	

© 2025 Jost