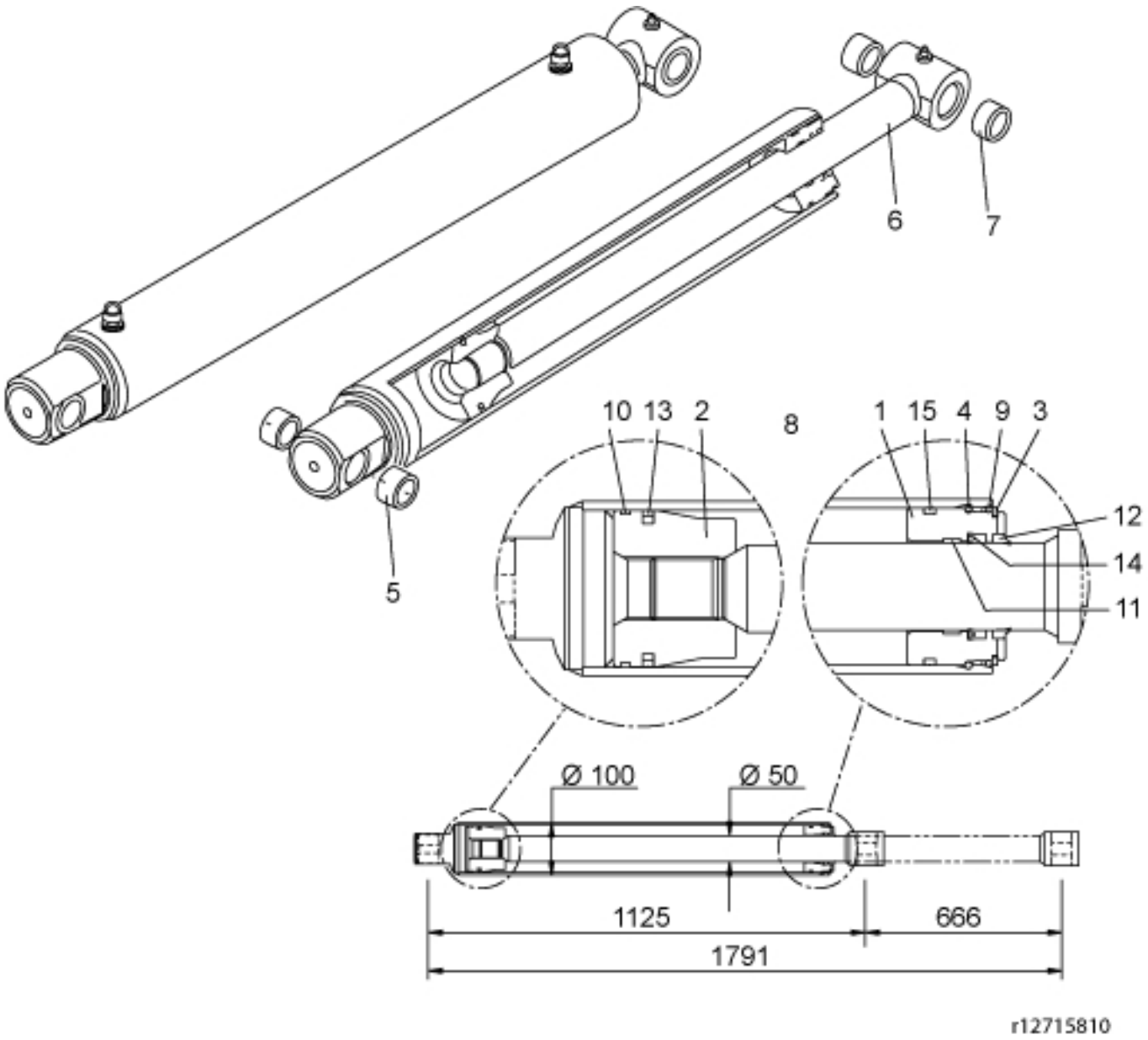



© 2025 Jost

| | |
|---|---|
| **Description** | 100/50 |
| **Part assemblies** | Lift Cylinder |
| **Specification** | Specification: Glossy Black |

| PartNo | Pos | Qty | Name | Specifications |
|---|---|---|---|---|
| 12710011 | 1 | 1 PCS | Bearing | |
| 12710012 | 2 | 1 | Piston | |
| 5016624 | 3 | 1 | Retaining ring | |
| 5016677 | 4 | 1 | Retaining ring | |
| 5018514 | 5 | 2 | Bushing | D35 L=20 |
| 12715723 | 6 | 1 | Piston rod cpl. | |
| 5018514 | 7 | 2 | • Bushing | D35 L=20 |
| 5033710 | 8 | 1 | Seal kit | |
| 5037265 | 9 | 1 | • O-ring | 91,6 x 3,53 |
| 5040018 | 10 | 1 | • Guide ring | 100/95 x 5,5 |
| 5040011 | 11 | 1 | • Guide ring | 50/55 x 9,7 |
| 5038104 | 12 | 1 | • Wiper | 50/60 x 7/10 |
| 5040028 | 13 | 1 | • Piston seal | 100/84,5 x 6,3 |
| 5038256 | 14 | 1 | • Seal | 50/60 x 10 |
| 5039008 | 15 | 1 | • Seal kit | 100 x 93,8 x 6,9 |


© 2025 Jost