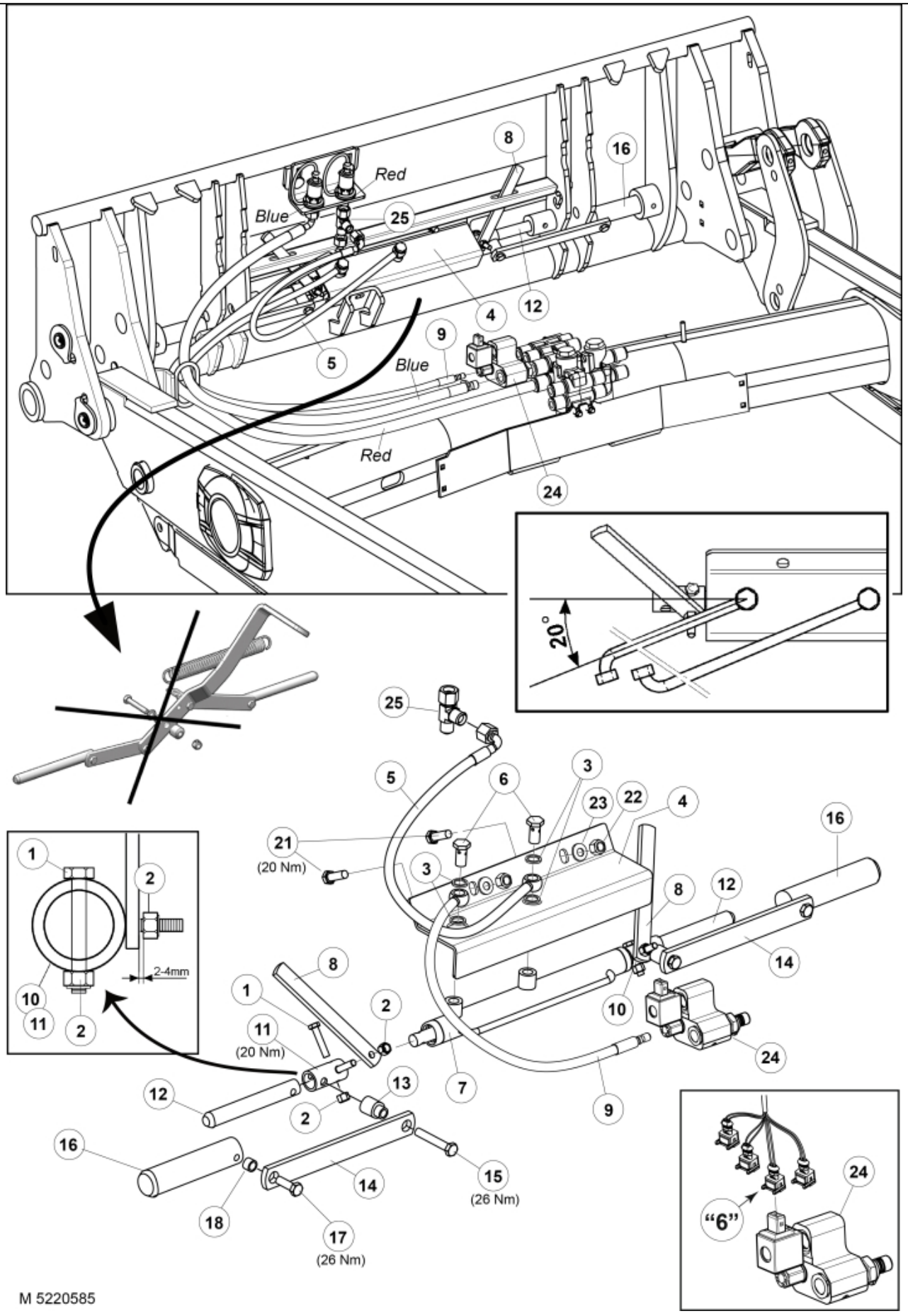
Red
Blue
25
8
16
4
12
9
5
Blue
Red
24
20°
25
5
6
3
23
22
4
16
21
(20 Nm)
3
8
12
14
1
2
2-4mm
10
11
2
8
1
2
11
(20 Nm)
10
24
12
13
7
9
2
16
15
(26 Nm)
14
18
17
(26 Nm)
24
"6"
M 5220585

© 2025 Jost

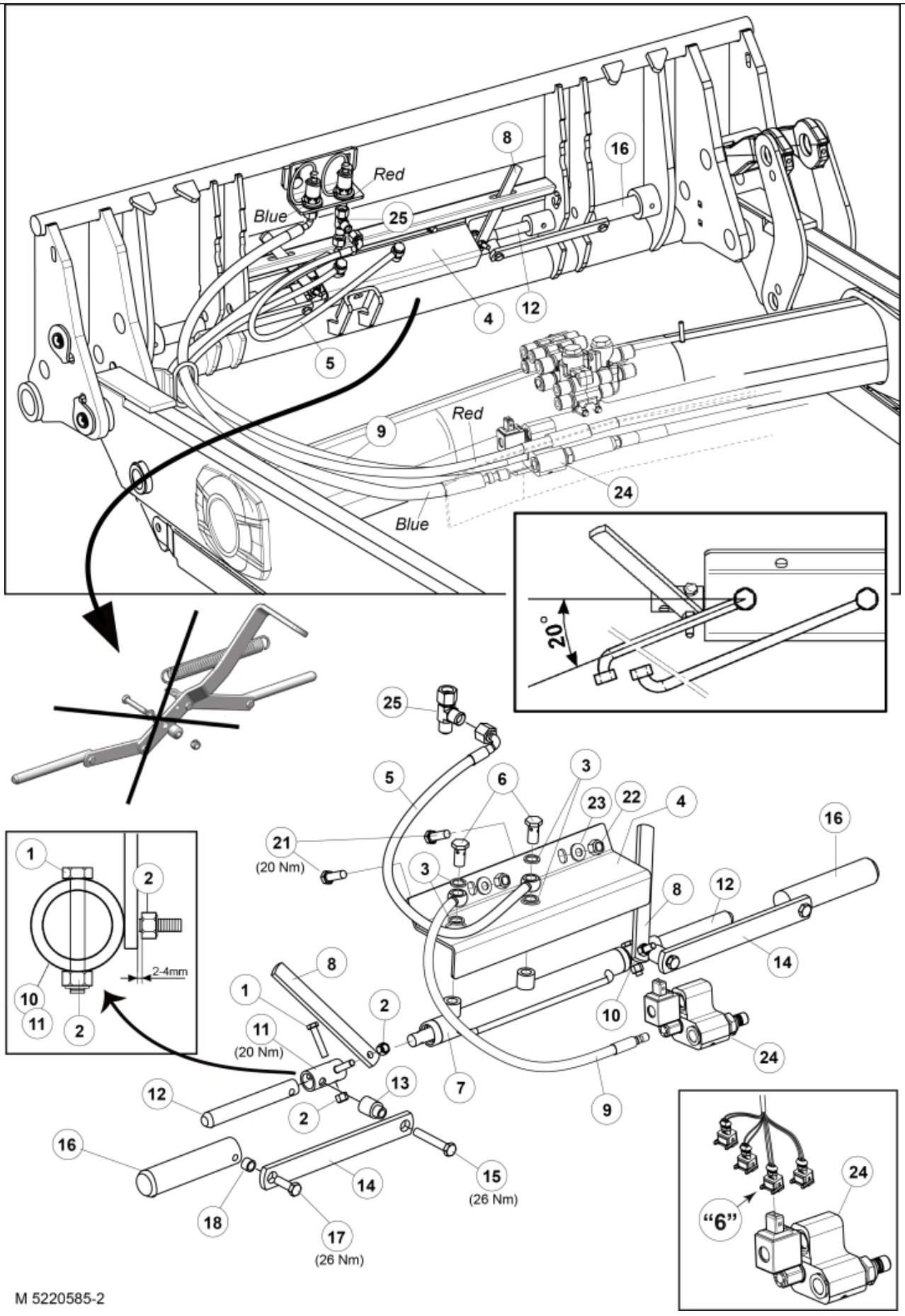
Red
Blue
8
16
25
12
4
5
9
Red
24
Blue
20°
25
5
6
3
23
22
4
16
21
(20 Nm)
3
8
12
14
1
2
2-4mm
10
11
2
8
1
11
(20 Nm)
2
10
24
12
13
7
9
2
16
14
15
(26 Nm)
18
17
(26 Nm)
24
"6"
M 5220585-2

© 2025 Jost

Part assemblies Implement lock LCS

PartNo	Pos	Qty	Name	Specifications
5220585			Implement lock LCS	
5034089			Locking kit	
5002055	1	2	• Screw	M6S M8x40
5011553	2	4	• Nut	M6M M8 Loc-king
5013856	3	4	• Dowty washer	Tredo 1/4"
5219048	4	1	• Protection plate	
60000143	5	1 PCS	• Hose	1/4" L=550mm (9031170)
1120166	6	2	• Banjo fitting	R1/4"
12713210	7	1	• Cylinder	Ø25/16 L=370-590 Lock cyl.
60005579		1	•• Seal kit	Implement lock. cyl.
5219049	8	2	• Indicator	
60000286	9	1 PCS	• Hose	1/4" L=1400mm (9031484)
5034092	10	1 PCS	• Sleeve RH	
5034093	11	1 PCS	• Sleeve LH	
5219044	12	2	• Pin	D=20mm
5034090	13	2 PCS	• Spacer	
5220566	14	2 PCS	• Extension piece	
5002993	15	2 PCS	• Screw	M10x60 Driloc
5220564	16	2 PCS	• Pin	D=35mm
5002972	17	2	• Screw	M6S 10x40 Driloc
5219100	18	2	• Spacer	
5002077	21	2	• Screw	M6S 10x30
5011554	22	2	• Nut	Loc-King M10
5013110	23	2	• Washer	BRB 10.5x22x2
10550455	24	1 PCS	• Valve	
5027454	25	1	• L-coupling	
5033992			Safety switch cpl.	Replaces 5033991

© 2025 Jost