

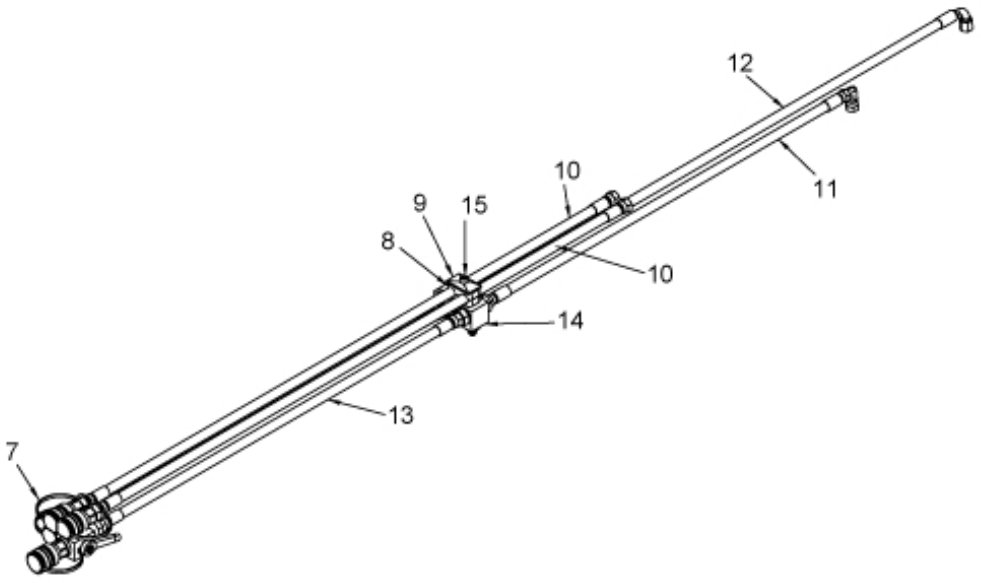

r903170x

© 2025 Jost

Part assemblies Main hose kit

PartNo	Pos	Qty	Name	Specifications
5034110	1	1	Shut off	3/4" JIC
5028051	2	1	Adaptor	UNF 9/16 -18 JIC 37° female 90°
5028078	3	2	Adaptor	3/4" ORB -3/4" JIC
5028118	4	2	Adapter short cpl.	9/16" UNF JIC
5028119	5	2	Adaptor	JIC 9/16 UNF 3/4
5044973	6	4	Quick Coupling	ISO-A Coupling 3/8"
5034111	7	4	Dust Cover	ISO 3/8"
5221575	8	1 PCS	Hose clamp	
5221581	9	1 PCS	Washer	
9031721	10	2 PCS	Hose	1/2" L=3335mm
9031714	11	1	Hose	3/8" L=4350mm
9031718	12	1	Hose	3/8" L=4900mm
9031699	13	2 PCS	Hose	1/2" L=850mm
10550409	14	1 PCS	Valve block	
5004063	15	1 PCS	Screw	MC6S M8x50

© 2025 Jost