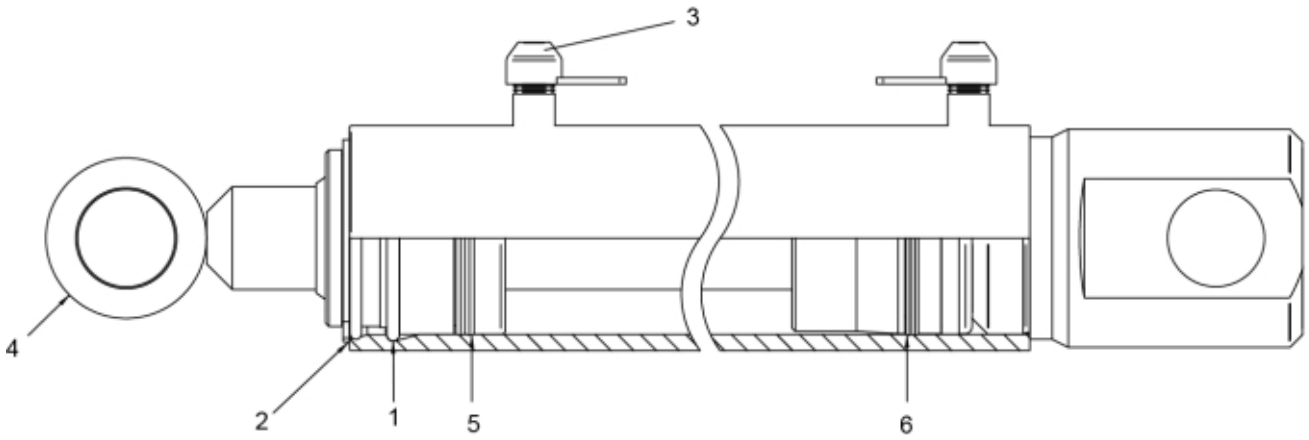

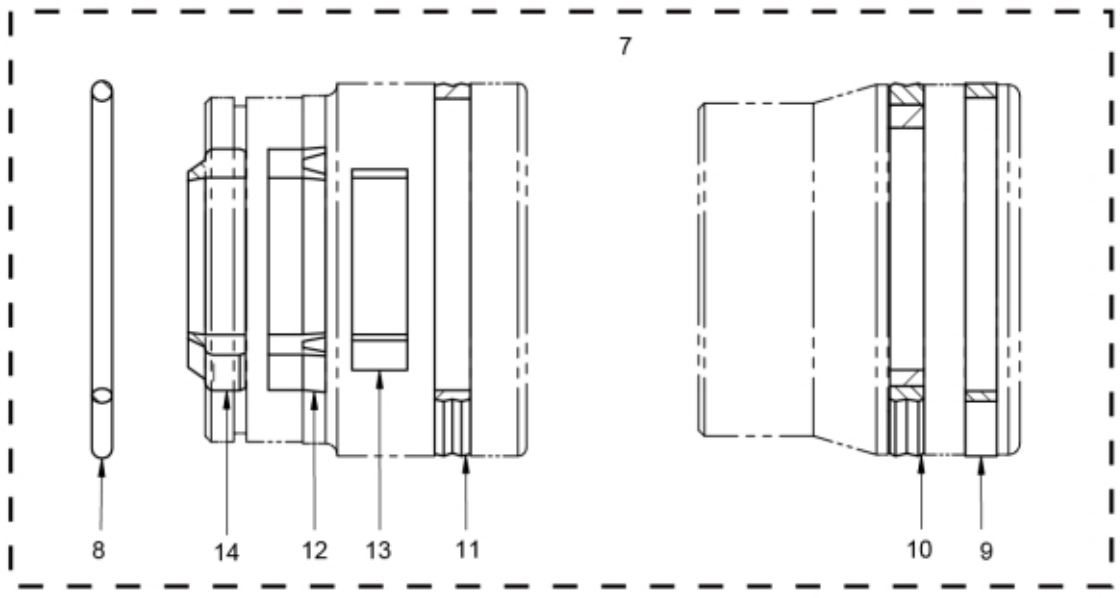

r12717310

© 2025 Jost

Description	65/32
Part assemblies	Cylinder
Specification	Specification: Glossy Black

PartNo	Pos	Qty	Name	Specifications
5016668	1	1	Retaining ring	
5016608	2	1	Circlip	
5028083	3	2	Plug	
12719013	4	1	Piston rod	
12716111	5	1	Bearing	
12716612	6	1 PCS	Piston	
5034115	7	1	Seal kit	
5037242	8	1	• O-ring	58,74 x 3,53
5040012	9	1	• Guide ring	65/60 x 5,5
5040022	10	1	• Piston seal	65/49,5 x 6,3
5039002	11	1	• Cover seal	65 x 59,6 x 6,2
5040057	12	1	• Seal kit	43 x 31 x 10
5040058	13	1	• Guide ring	35 x 9.6
5040059	14	1	• Wiper	42 x 31 x 10

© 2025 Jost