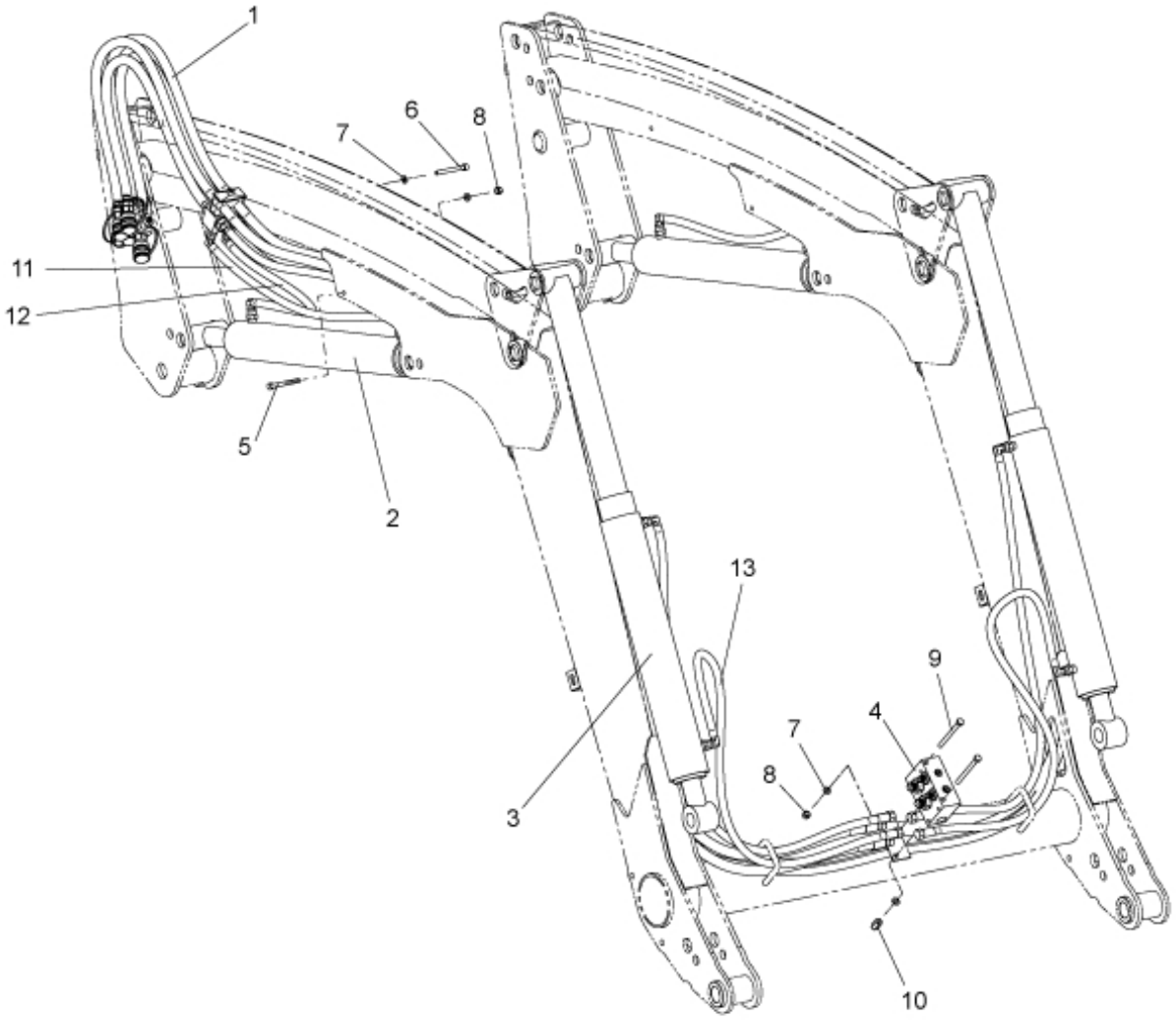

r220PX_2

© 2025 Jost

Part assemblies	Hydraulics
Specification	Year To: 10/31/2011 12:00:00 AM

PartNo	Pos	Qty	Name	Specifications
9031708	1	1 PCS	Main hose kit	
12717710-1	2	2	Cylinder	Glossy Black
60047994-1	3	2	Tilt Cylinder	Glossy Black. Replaces 12718710-1
10550406	4	1 PCS	Diverter valve cpl.	
5004939	5	1 PCS	Screw	MC6S 8x90
5004055	6	1	Screw	MC6S 8x70
5013101	7	4	Washer	BRB 8,4 x 16
5011553	8	2	Nut	M6M M8 Loc-king
5002978	9	2	Screw	M6S 8x129
5011928	10	1 PCS	Nut	M8
9031711	11	1 PCS	Hose	3/8"
9031710	12	1	Hose	3/8" L=520mm
9031723	13	4	Hose	3/8"

© 2025 Jost