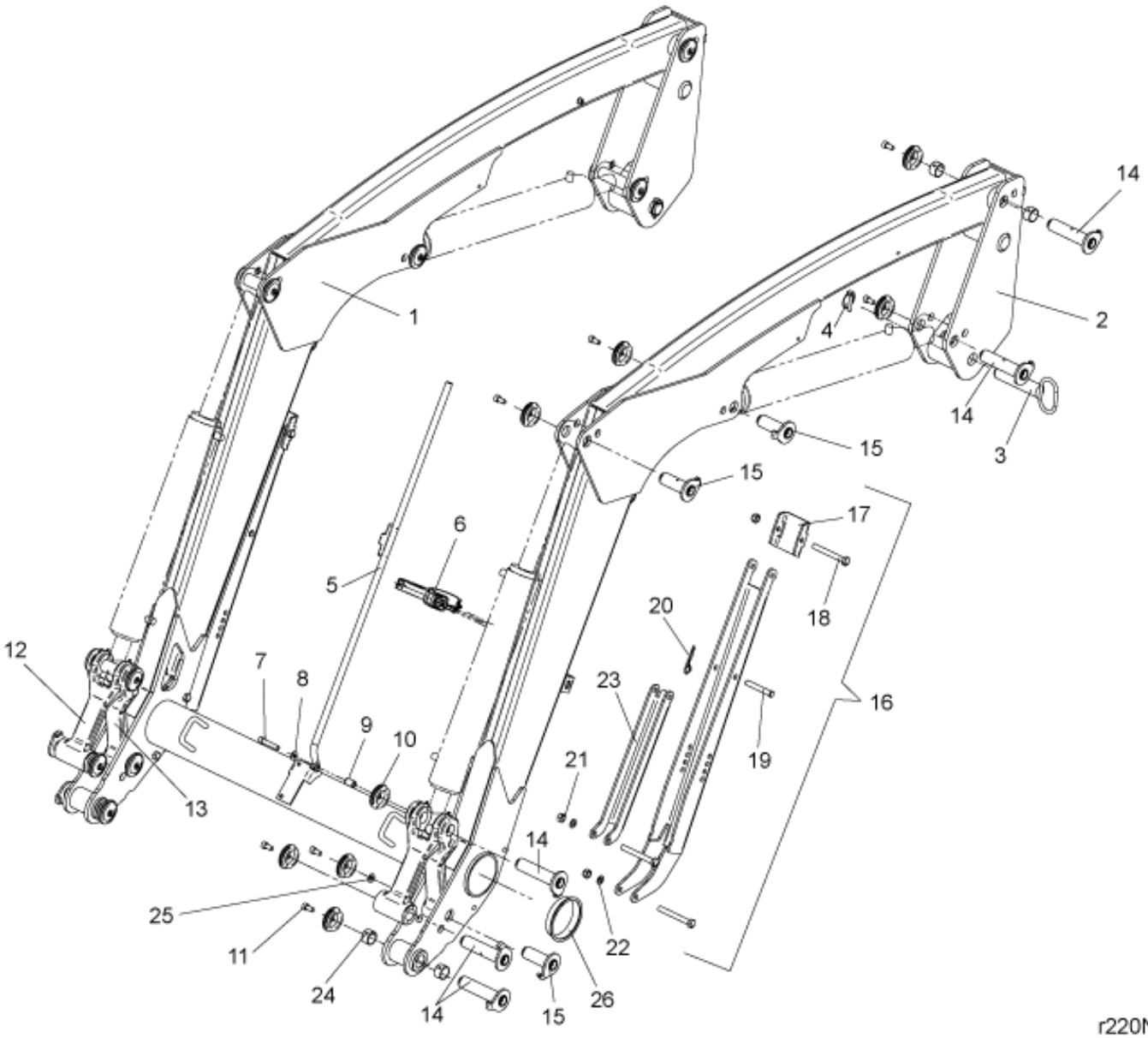
1
2
3
4
5
6
7
8
9
10
11
12
13
14
15
16
17
18
19
20
21
22
23
24
25
26
r220NX_1

© 2025 Jost

Part assemblies Loader beam

PartNo	Pos	Qty	Name	Specifications
5221218-7	1	1	Loader beam	Grey
5221321-7	2	2	Bearing box	Grey
5221510	3	2	Locking Pin	D=32mm
5017002	4	2	Linch pin	
5215219	5	1	Indicator rod	
5215209	6	1	Holder kit	
5050605	7	1	Screw	MC6S 10x50 Loc
5013110	8	1	Washer	BRB 10.5x22x2
5215227	9	1	Spacer	
5215131	10	16	Locking cover	
5004917	11	15	Screw	
5221361-1	13	2	Link	Glossy Black
5221365-1	12	2	Link	Glossy Black
60018046	14	10	Pivot Pin	D=30, L=127mm
60018050	15	6	Pivot Pin	D=30, L=84mm
5221343-7	16	2 PCS	Support leg	Grey, 1/19/2021 12:00:00 AM
5221495-7	17	1 PCS	• Support	Grey
5002114	18	3	• Screw	M6S 12x100
5021955	19	1	• Locking Pin	
5221186	20	1	• Pin clip	□ 12x120
5011911	21	3	• Nut	M12
5013103	22	2	• Washer	BRB 13x24
5221496-7	23	1 PCS	• Stay	Grey
5018515	24	8	Bushing	D30 L=20
5013110	25	2	Washer	BRB 10.5x22x2
5221572	26	2 PCS	Plastic cover	

© 2025 Jost