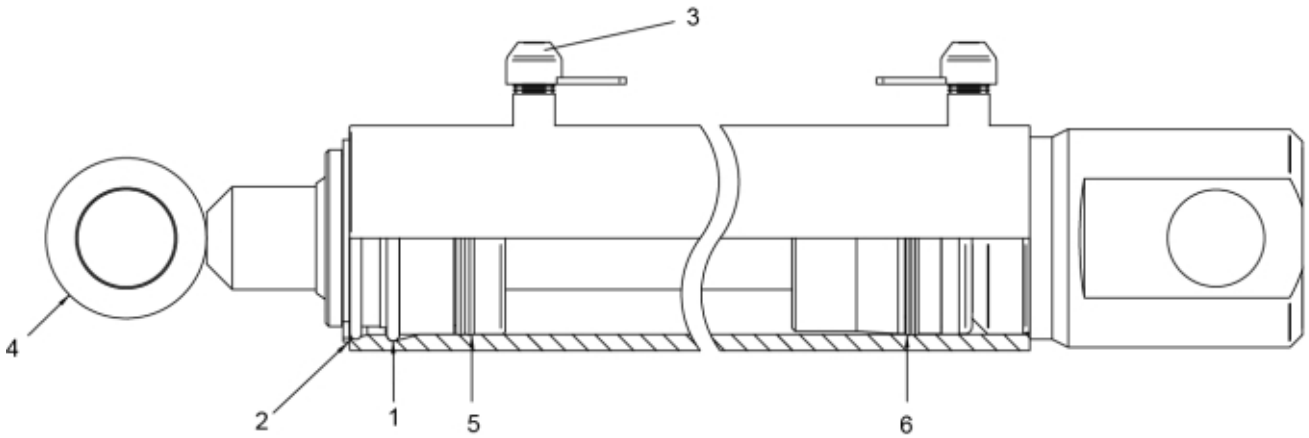

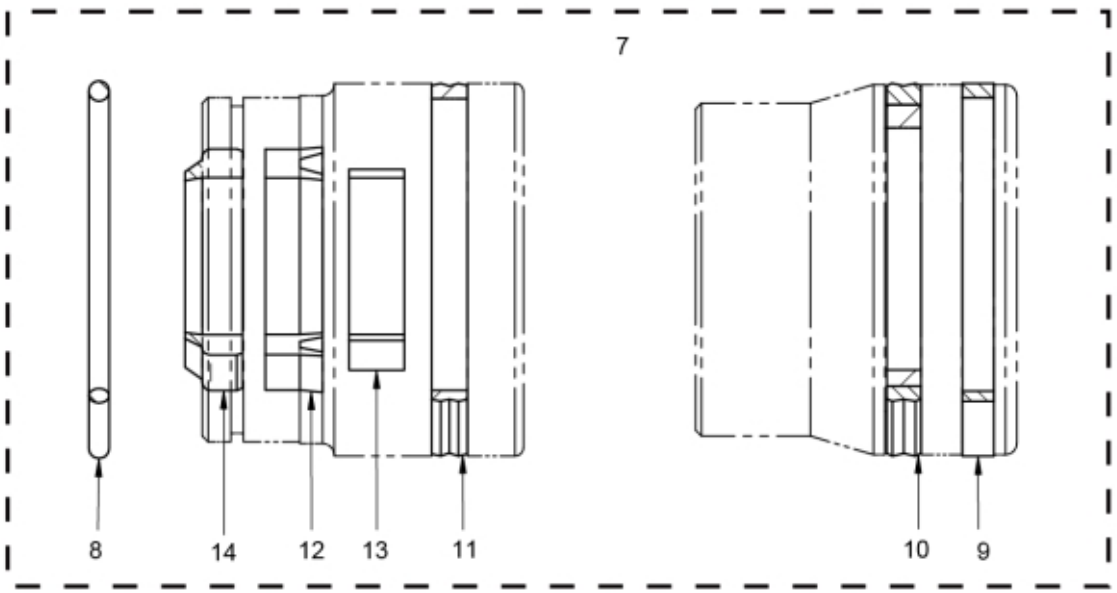

r12717310

© 2025 Jost

Description	80/40
Part assemblies	Cylinder
Specification	Specification: Glossy Black

PartNo	Pos	Qty	Name	Specifications
5016667	1	1	Retaining ring	
5016620	2	1	Retaining ring	
5028083	3	2	Plug	
12714813	4	1	Piston rod	
12708011	5	1	Bearing	D80/40
12708012	6	1	Piston	D80
5033706	7	1	Seal kit	
5037241	8	1	• O-ring	72,62 x 3,53
5040015	9	1	• Guide ring	80/75 x 5,5
5040025	10	1	• Piston seal	80/64,5 x 6,3
5039005	11	1	• Cover seal	80 x 73,6 x 6,4
5038254	12	1	• Seal	40/50x10
5040010	13	1	• Guide ring	40/45x9,7
5038101	14	1	• Wiper	40/50x7/10

© 2025 Jost