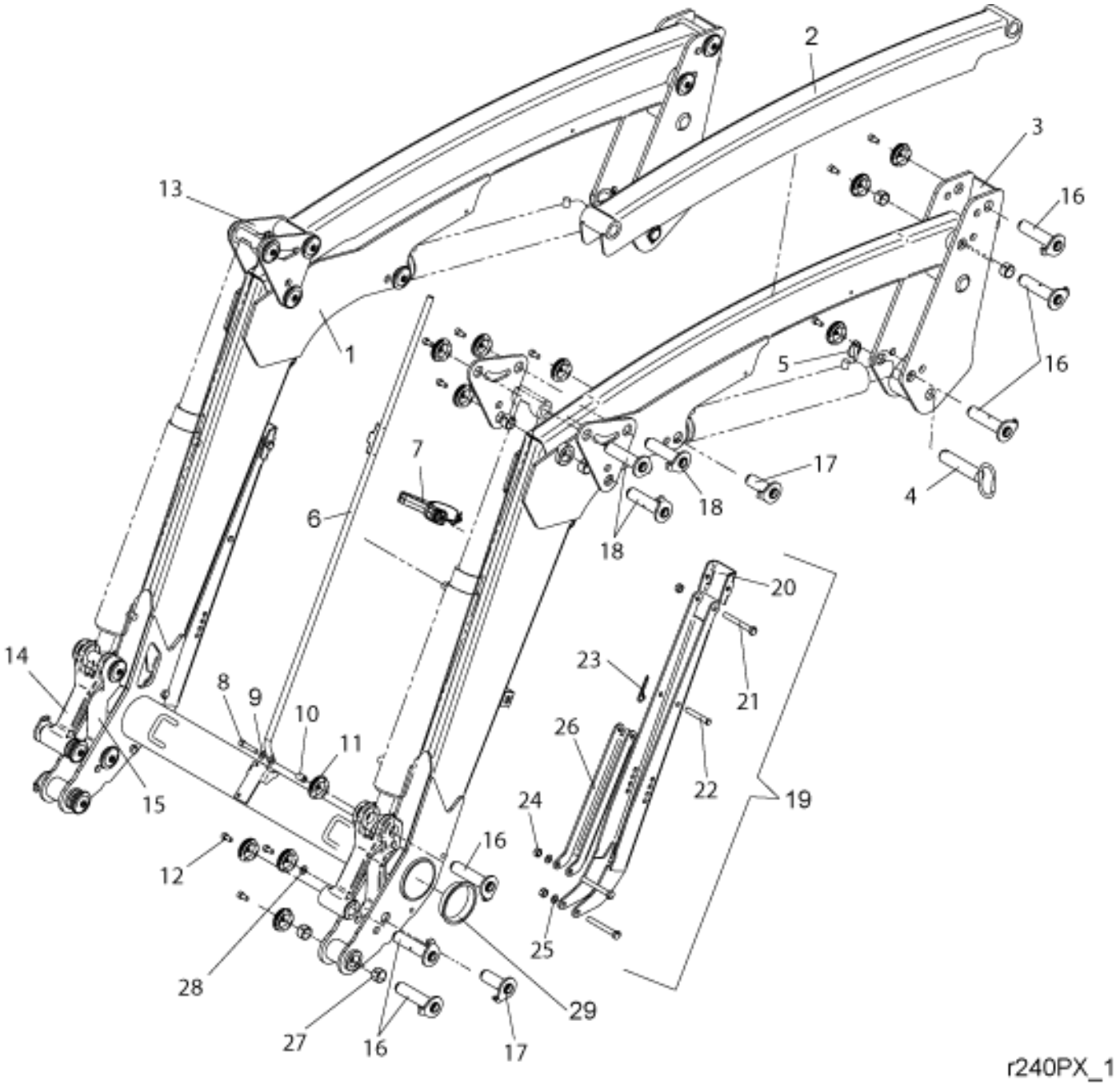
1
2
3
4
5
6
7
8
9
10
11
12
13
14
15
16
17
18
19
20
21
22
23
24
25
26
27
28
29
r240PX_1

© 2025 Jost

Part assemblies Loader beam

PartNo	Pos	Qty	Name	Specifications
5221258-7	1	1	Loader beam	Grey
5221358-7	2	2	Parallel rod	Grey
5221325-7	3	2	Bearing box	Grey
5221510	4	2	Locking Pin	D=32mm
5017002	5	2	Linch pin	
5215216	6	1	Indicator rod	
5215208	7	1	Holder kit	
5050605	8	1	Screw	MC6S 10x50 Loc
5013110	9	1	Washer	BRB 10.5x22x2
5215227	10	1	Spacer	
5215131	11	22	Locking cover	
5004917	12	21	Screw	
5221368-7	13	4	Link	Grey
5221361-1	14	2	Link	Glossy Black
5221365-1	15	2	Link	Glossy Black
60018046	16	12	Pivot Pin	D=30, L=127mm
60018050	17	4	Pivot Pin	D=30, L=84mm
9020100	18	6	Pivot Pin	D=30, L=122mm
5221343-7	19	2 PCS	Support leg	Grey, 1/19/2021 12:00:00 AM
5221495-7	20	1 PCS	• Support	Grey
5002114	21	3	• Screw	M6S 12x100
5021955	22	1	• Locking Pin	
5221186	23	1	• Pin clip	□ 12x120
5011911	24	3	• Nut	M12
5013103	25	2	• Washer	BRB 13x24
5221496-7	26	1 PCS	• Stay	Grey
5018515	27	12	Bushing	D30 L=20
5013110	28	2	Washer	BRB 10.5x22x2
5221572	29	2 PCS	Plastic cover	

© 2025 Jost