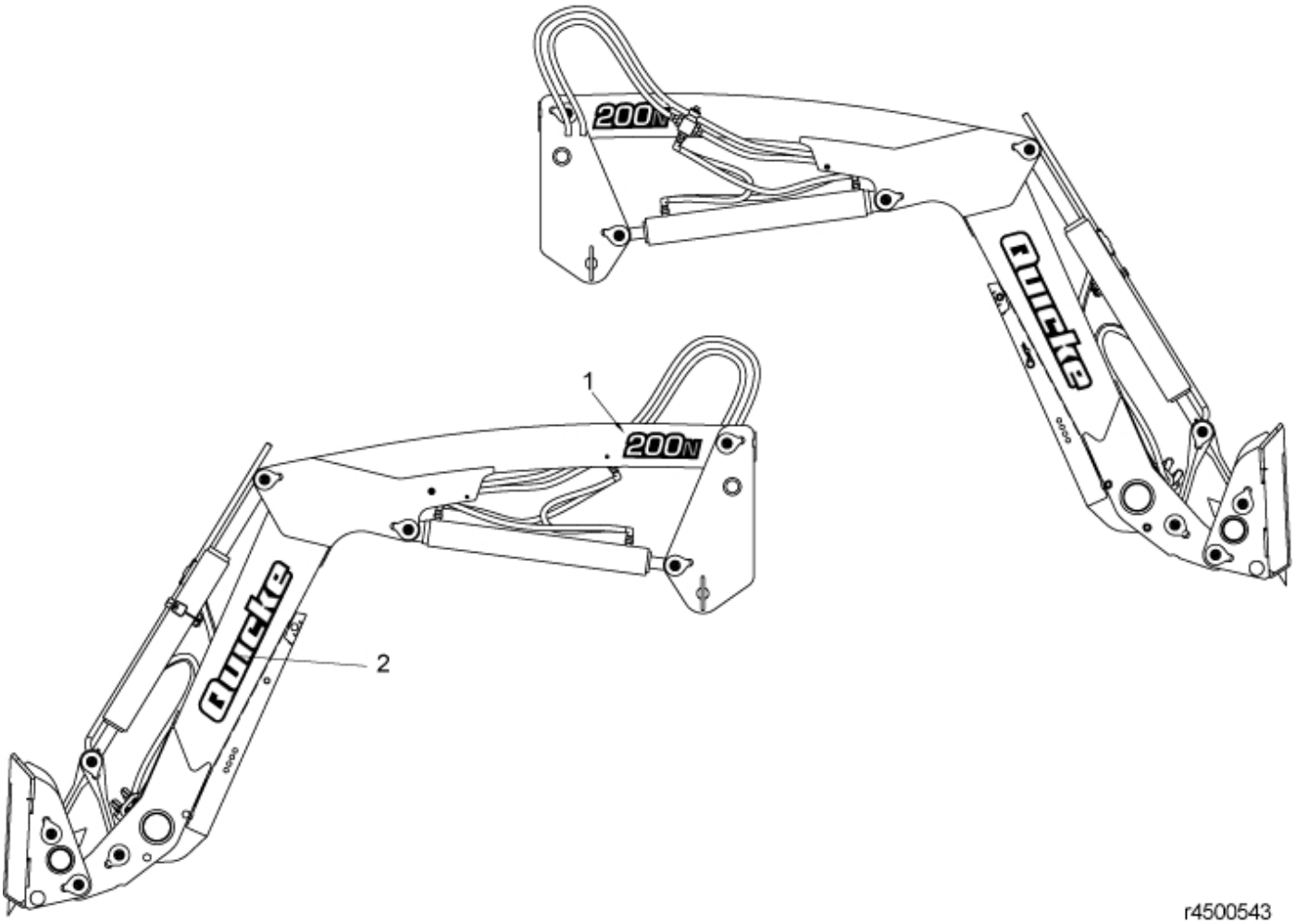

© 2025 Jost

Part assemblies	Decal kit 200N

PartNo	Pos	Qty	Name	Specifications
11135220	1	2 PCS	200N	
11135279	2	2 PCS	Decal, Brand	

© 2025 Jost