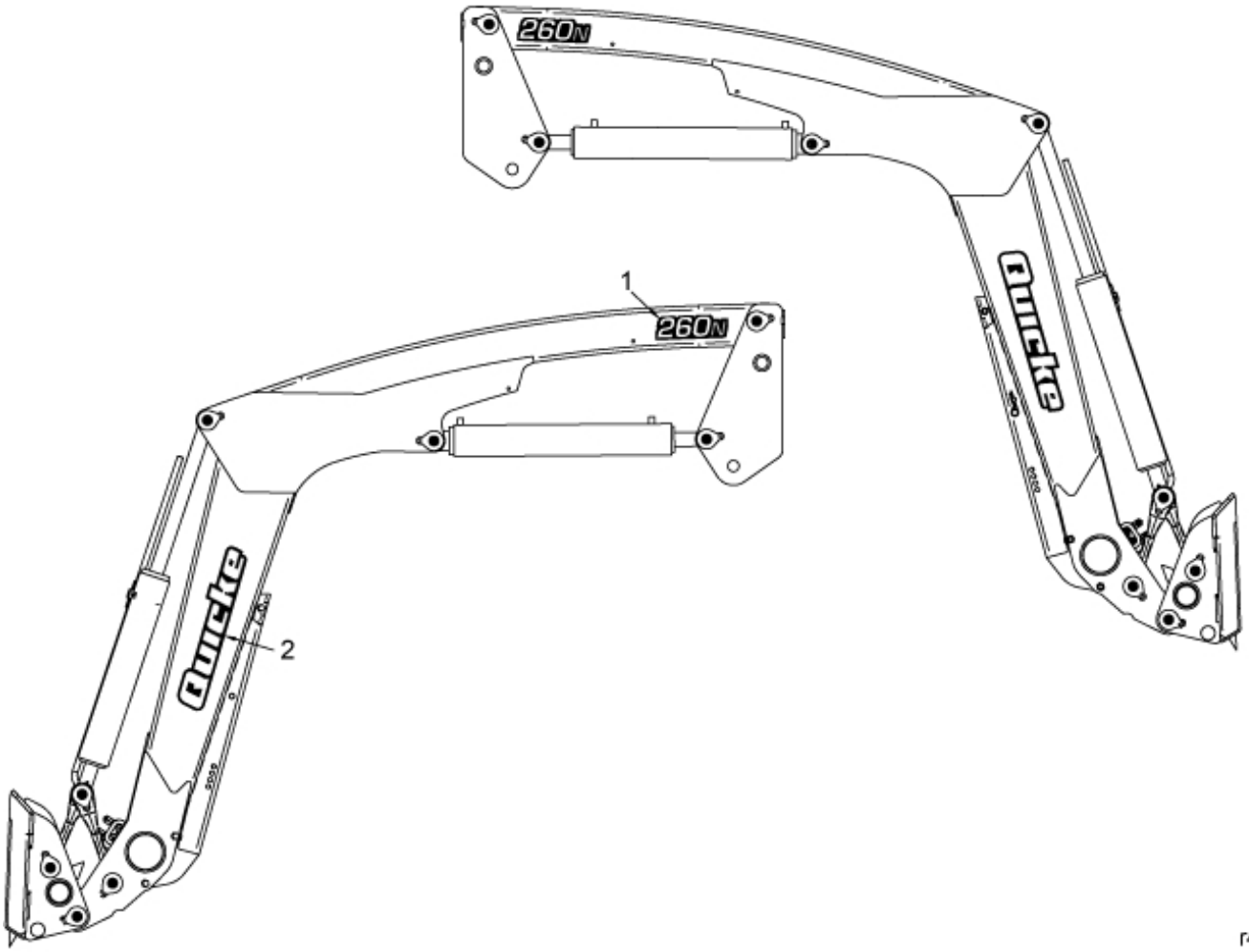

© 2025 Jost

Part assemblies Decal kit 260N

PartNo	Pos	Qty	Name	Specifications
11135226	1	2 PCS	260N	
11135279	2	2 PCS	Decal, Brand	

© 2025 Jost