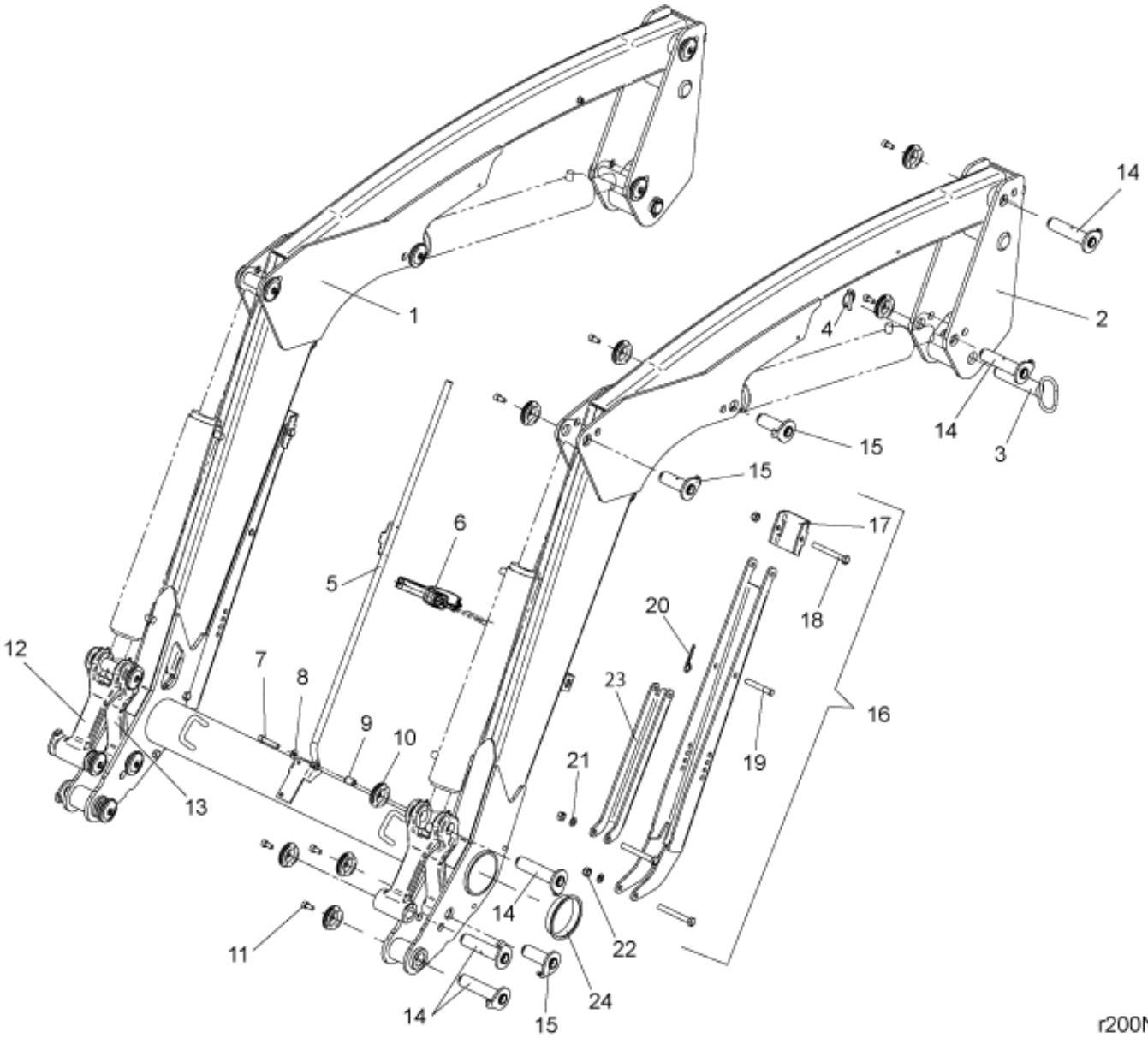

© 2025 Jost

Part assemblies Loader beam

PartNo	Pos	Qty	Name	Specifications
5221215-1	1	1	Loader beam	Glossy Black
5221321-1	2	2	Bearing box	Glossy Black
5221510	3	2	Locking Pin	D=32mm
5017002	4	2	Linch pin	
5215219	5	1	Indicator rod	
5221188	6	1	Holder kit	
5050605	7	1	Screw	MC6S 10x50 Loc
5013110	8	1	Washer	BRB 10.5x22x2
5215227	9	1	Spacer	
5215131	10	16	Locking cover	
5004917	11	15	Screw	
5221361-1	12	2	Link	Glossy Black
5221365-1	13	2	Link	Glossy Black
60018046	14	10	Pivot Pin	D=30, L=127mm
60018050	15	6	Pivot Pin	D=30, L=84mm
5221342-1	16	2 PCS	Support leg	Glossy Black, 1/19/2021 12:00:00 AM
5221495-1	17	1 PCS	• Support	Glossy Black
5002114	18	3	• Screw	M6S 12x100
5021955	19	1	• Locking Pin	
5221186	20	1	• Pin clip	□ 12x120
5011911	21	3	• Nut	M12
5013103	22	2	• Washer	BRB 13x24
5221496-1	23	1 PCS	• Stay	Glossy Black
5221165	24	2	Plastic cover	

© 2025 Jost