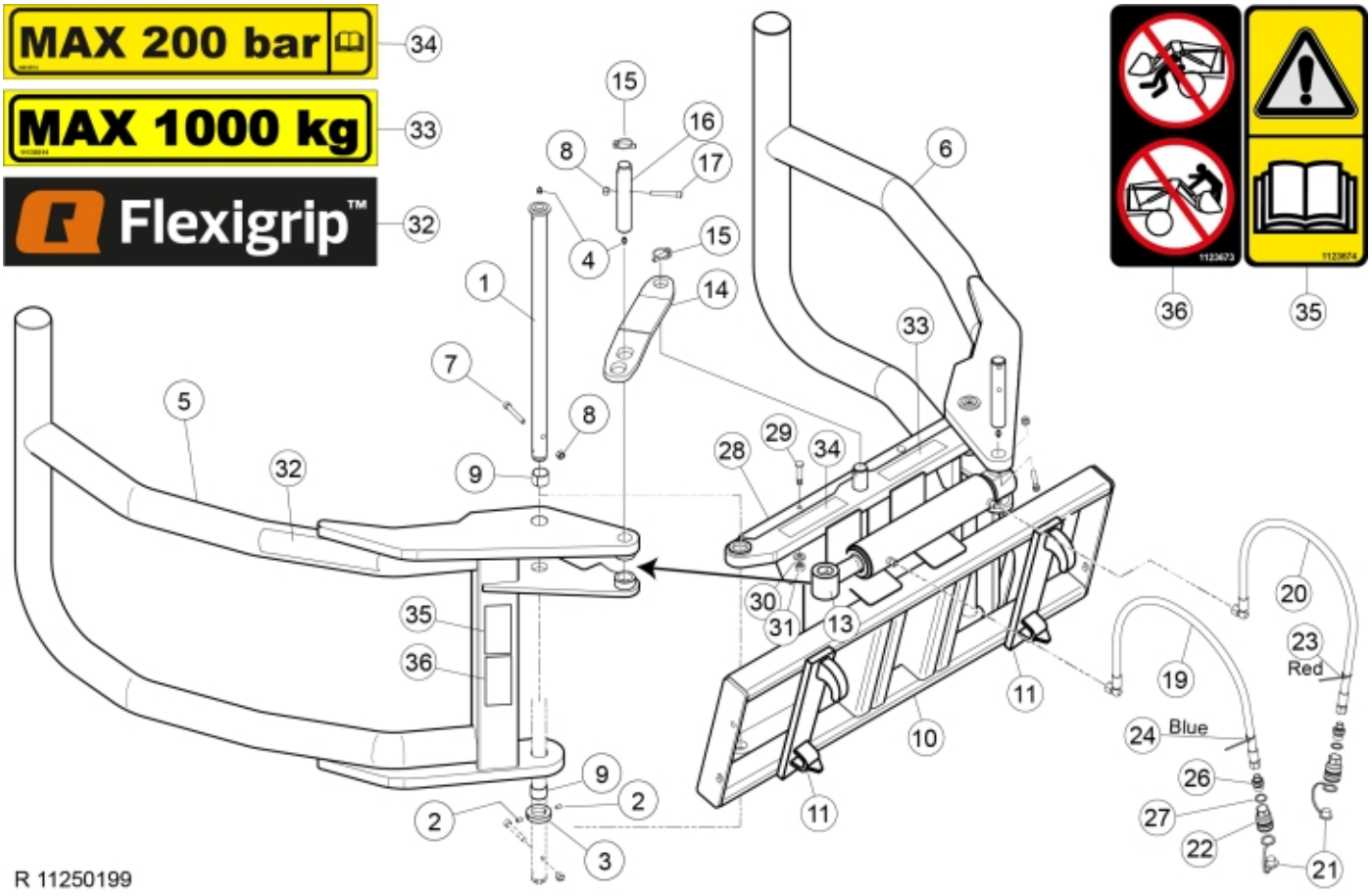

© 2025 Jost

Part assemblies	Flexigrip 160 BM Big
Specification	Year From: 1/1/2010 12:00:00 AM

PartNo	Pos	Qty	Name	Specifications
11250199		1 PCS	Flexigrip 160 BM Big	1/1/2010 12:00:00 AM
1116703	1	2 PCS	Pin	
5005444	2	4 PCS	Stop screw	S6SS M8x16
1109551	3	2	Locking Ring	
5023005	4	2	Greaser	M 10 x 1
11260383	5	1 PCS	Grab arm LH	
11260384	6	1 PCS	Grab arm RH	
5004079	7	2 PCS	Screw	MC6S M10x75
5011554	8	4	Nut	Loc-King M10
5018517	9	4 PCS	Bushing	D35 L=30
1510341	10	1 PCS	Frame	- 200409
60019103	10	1 PCS	Frame	Replaces 11262494 from 2016-10
11209713	11	2 PCS	Attachment kit BM Big	
60126216-1	13	1	Cylinder	4/8/2026 12:00:00 AM
1209758	14	1	Locking mechanism	
1102001	15	2	Linch pin	
60032873	16	2 PCS	Pin	Replaces 1116701
5004082	17	2 PCS	Screw	MC6S 10x65
10377023	18	1	Hose kit	
1103113	19	1 PCS	• Hose	3/8" L=500 3/8GRLM - 3/8G90LMC
1103147	20	1 PCS	• Hose	3/8"
5044130	21	2	• Dust Cover	Part is included in kit 60007907 Hose cpl., 9032177 Hose cpl.
5044127	22	2	• Quick Coupling	1/2", Part is included in kit 60007907 Hose cpl., 9032177 Hose cpl.
5022177	23	1	• Cable tie	Red
5022179	24	1	• Cable tie	Blue
5033606	25	1	• Cable tie	7,5 x 385
1120011	26	2	• Adaptor	R1/2"-R3/8"
5013604	27	2	• Washer	Copper 21x28x2
60005645-22	28	2 PCS	Edge cover	
5006014	29	4 PCS	Screw	MVBF M8X50 (8.8)
5013936	30	4 PCS	Washer	TBRB 13x24x4 fzb
5011553	31	4	Nut	M6M M8 Loc-king
11137142	32	2 PCS	Decal	Flexigrip
11136514	33	1	Warning decal	"Max 1000 kg"
60018712	34	1	Warning decal	
1123674	35	1	Warning decal	"Read manual"
1123673	36	1	Warning decal	

© 2025 Jost