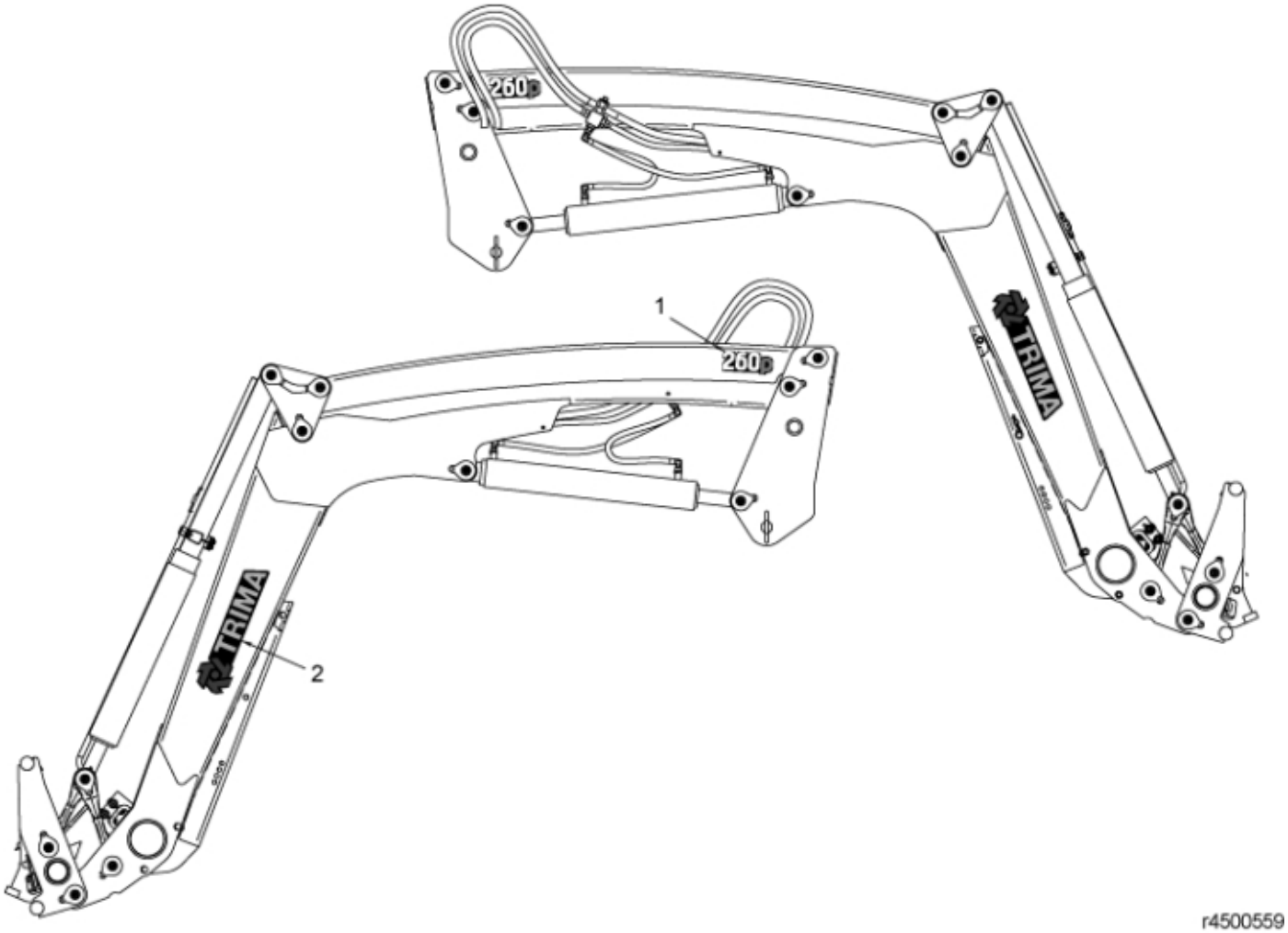

r4500559

© 2025 Jost

Part assemblies Decal kit 260P

PartNo	Pos	Qty	Name	Specifications
11135237	1	2 PCS	260P	
11135054	2	2 PCS	Decal, Brand	

© 2025 Jost