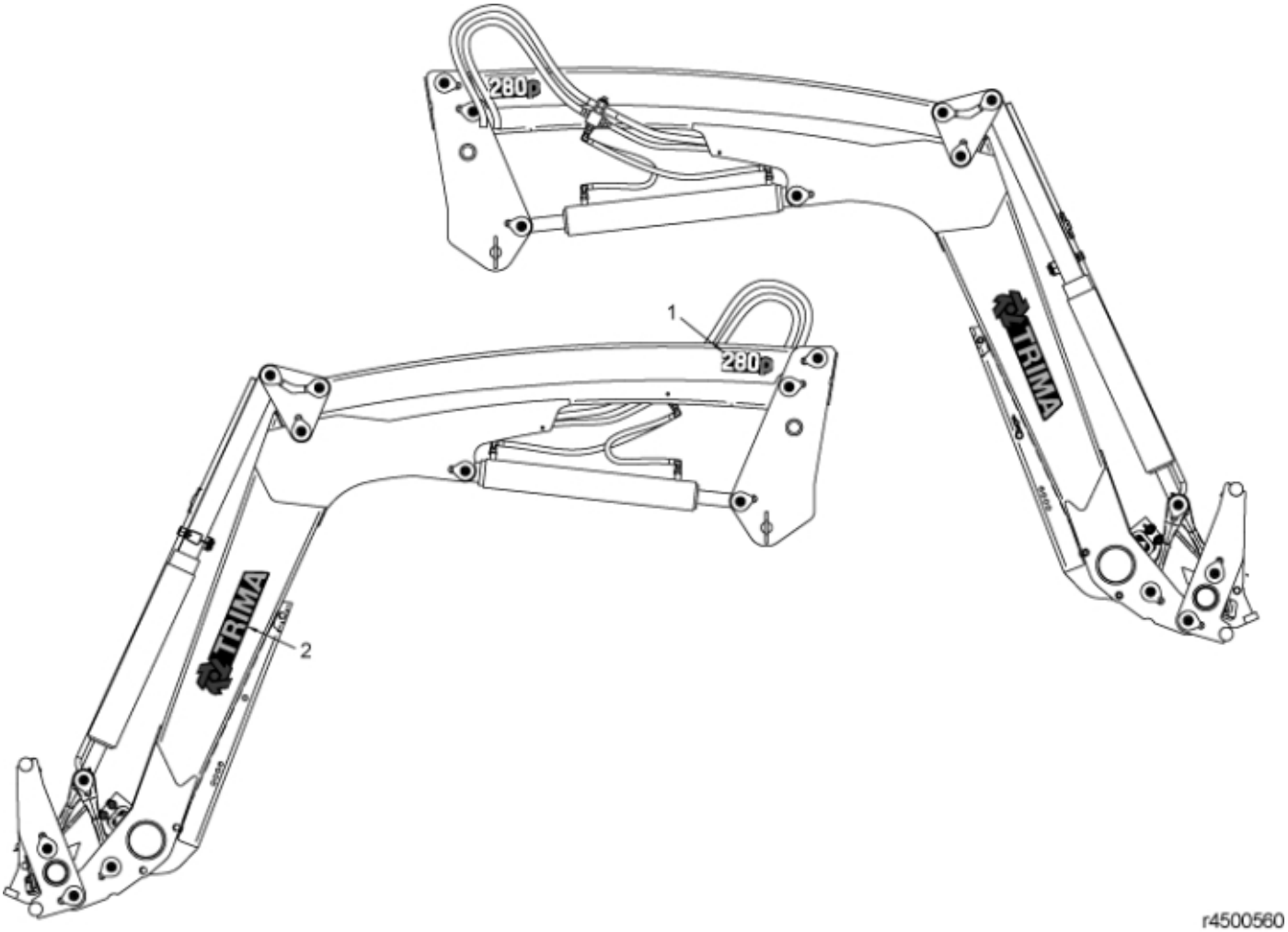

r4500560

© 2025 Jost

Part assemblies Decal kit 280P

PartNo	Pos	Qty	Name	Specifications
11135238	1	2 PCS	280P	
11135054	2	2 PCS	Decal, Brand	

© 2025 Jost