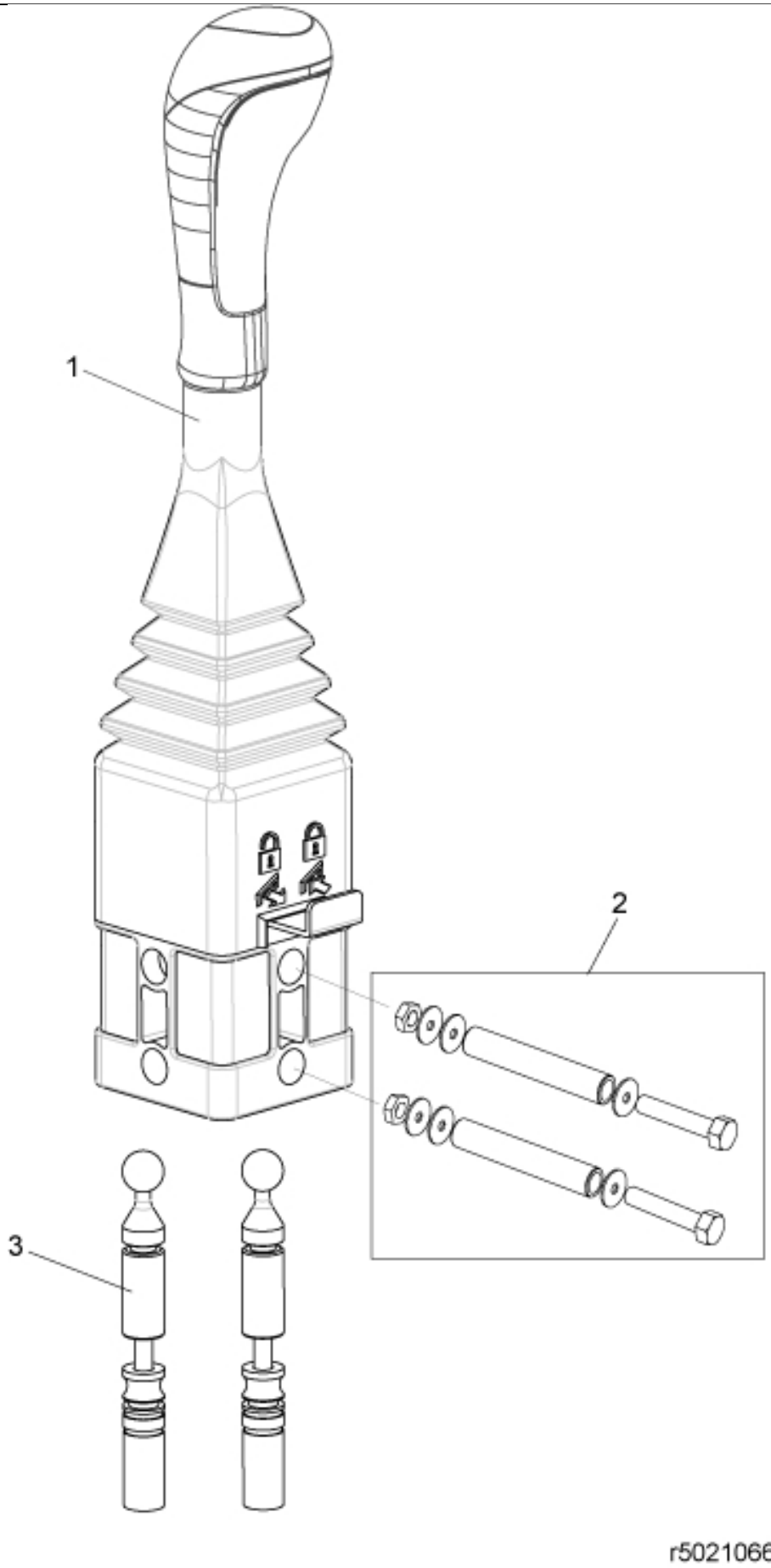

© 2025 Jost

Part assemblies		Lever kit		
Specification		Specification: L=1600mm		
PartNo	**Pos**	**Qty**	**Name**	**Specifications**
5021103	1	1	Control lever	
5220354	2	1	• Screw kit	Part is included in kit 5021158 Lever kit (2000mm)
5020942	3	2	Control cable	L=1600mm (5020353)

© 2025 Jost