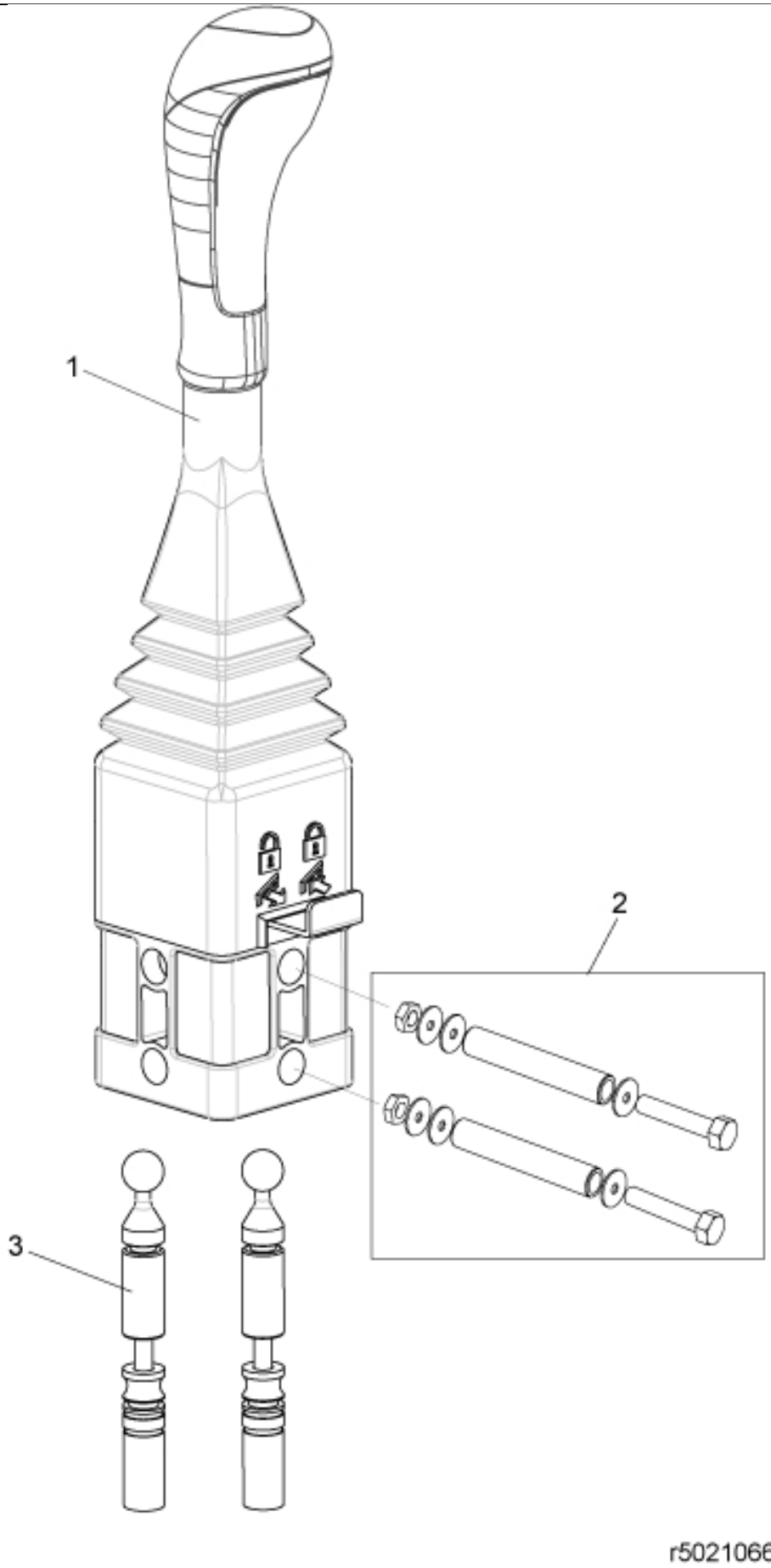

© 2025 Jost

Part assemblies	Lever kit
Specification	Specification: L=2000mm

PartNo	Pos	Qty	Name	Specifications
5021103	1	1	Control lever	
5220354	2	1	• Screw kit	Part is included in kit 5021158 Lever kit (2000mm)
5020944	3	2	Control cable	L=2000mm (5020355)

© 2025 Jost