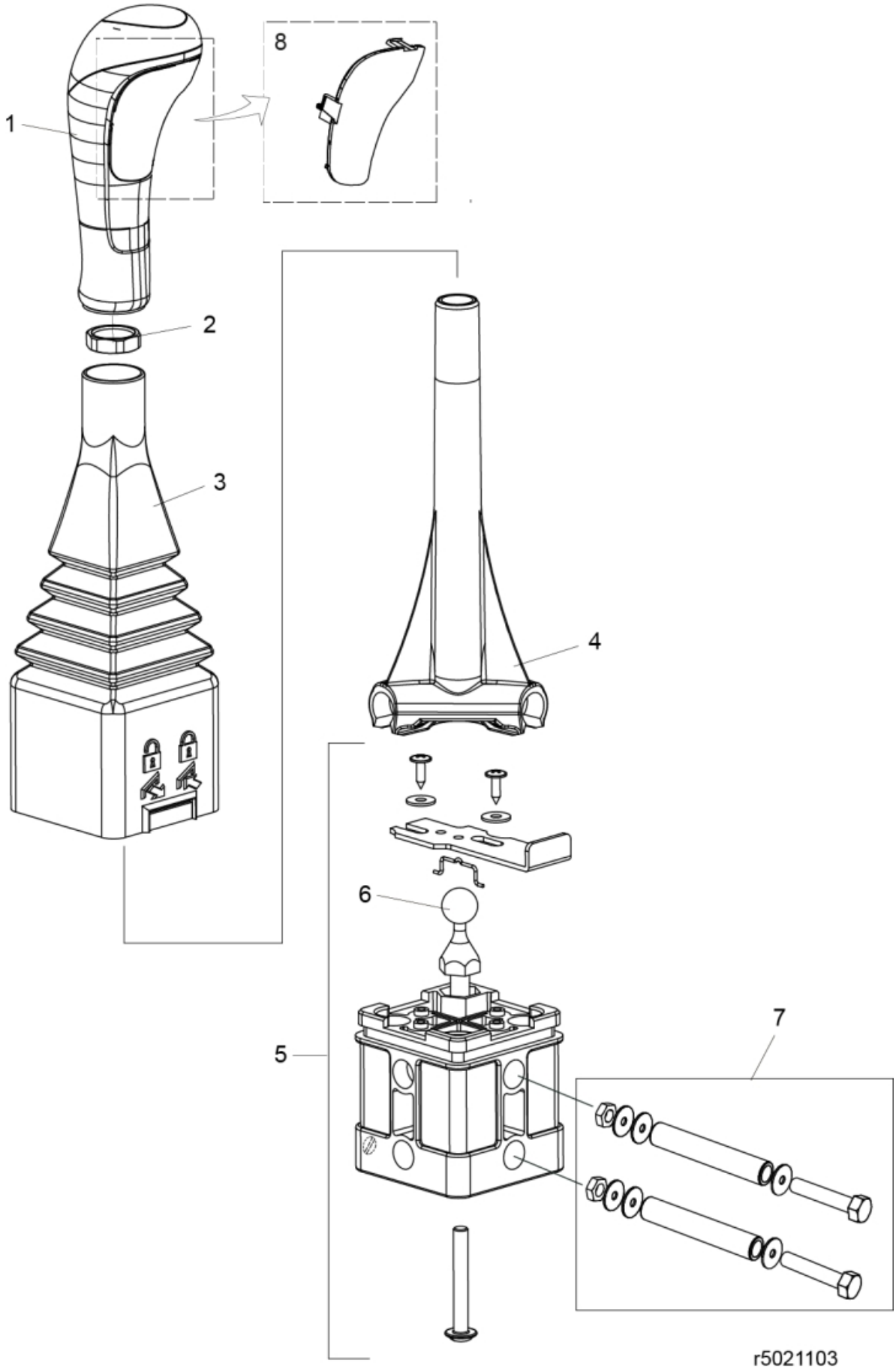

© 2025 Jost

Part assemblies Control lever

PartNo	Pos	Qty	Name	Specifications
5021100	1	1	Handle RH	
4500351	2	1	Nut	
5021043	3	1	Gaiter	Replaces 4500350
4500352	4	1	Lever	
5021044	5	1	Housing cpl.	
4500353	6	1	• Pivot	
5220354	7	1	Screw kit	Part is included in kit 5021158 Lever kit (2000mm)
5021099	8	1	Boot	0 switches

© 2025 Jost