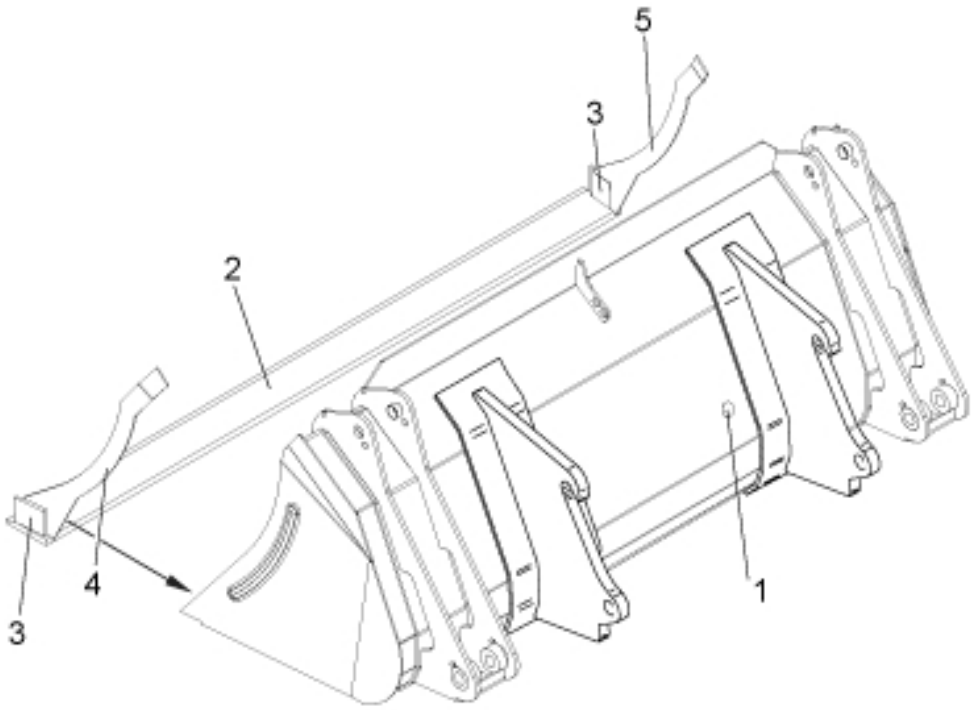

11262051

© 2025 Jost

Part assemblies Bucket

PartNo	Pos	Qty	Name	Specifications
5022119	1	2	Plug	
11260061	2	1	Cutting edge	
11261438	3	2	Cutting edge	L=80
11261467	4	1 PCS	Stiffening Plate LH	
11261468	5	1 PCS	Stiffening Plate RH	

© 2025 Jost