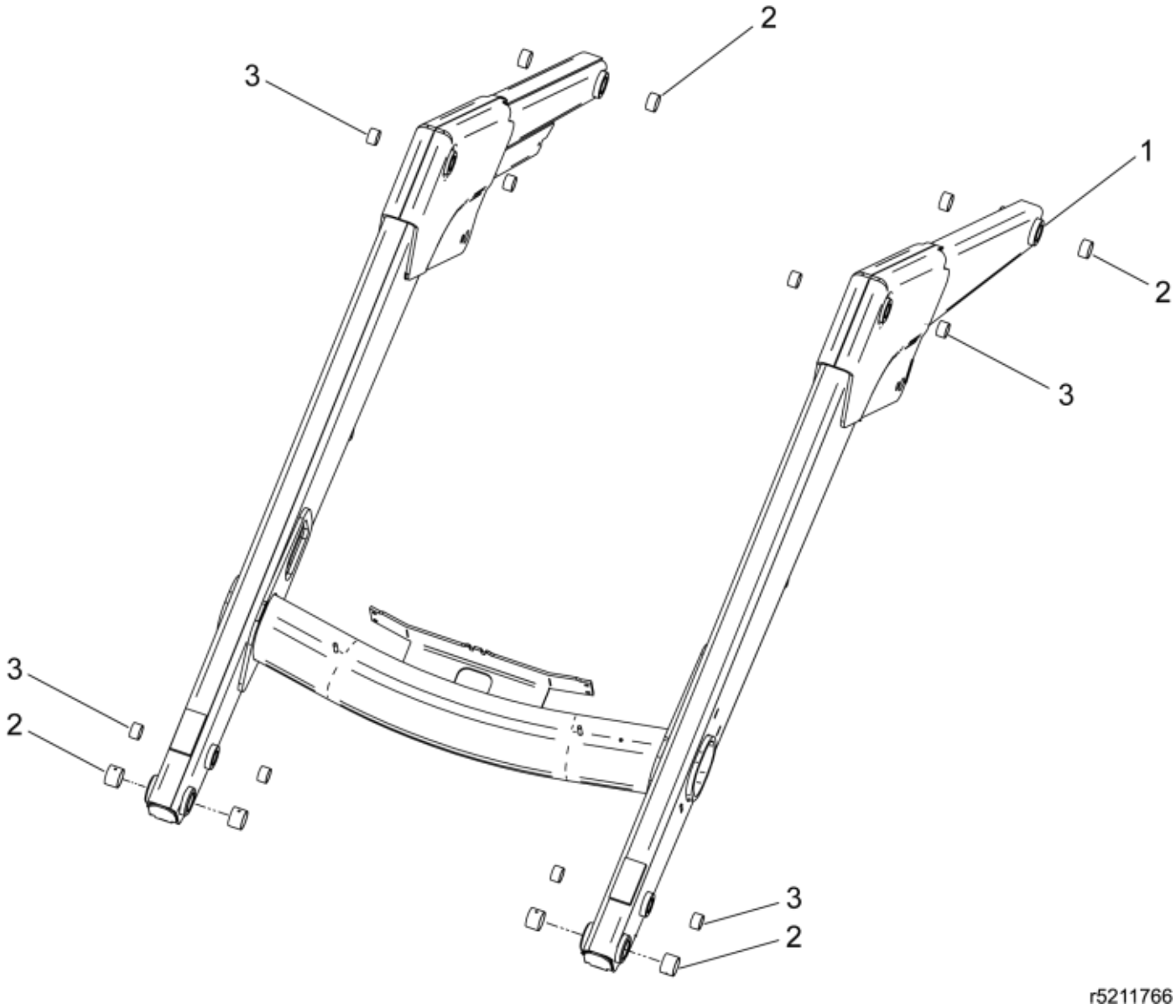

© 2025 Jost

Part assemblies	Loader beam w. bushings
Specification	Specification: Case Red

PartNo	Pos	Qty	Name	Specifications
5211768-13	1	1	Loader beam w. bushings	Case Red
5018904	2	8	Bushing	D40 L=30
5018514	3	8	Bushing	D35 L=20

© 2025 Jost