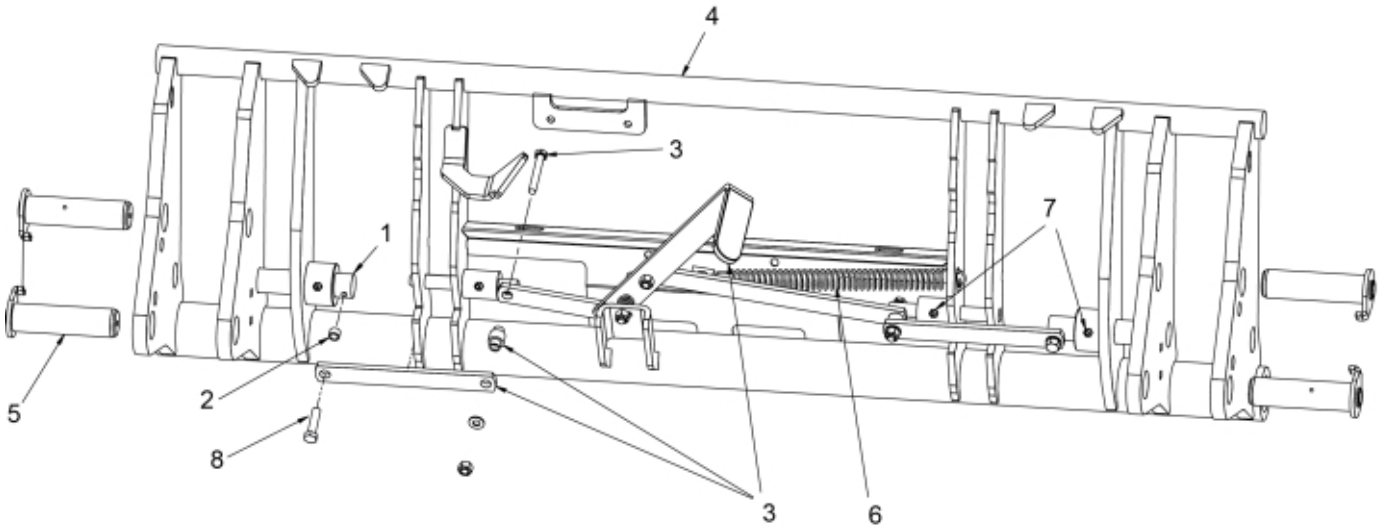

r5220568

© 2025 Jost

Description	Tool carrier
Part assemblies	Euro/Alo HD
Specification	Specification: Case Red

PartNo	Pos	Qty	Name	Specifications
5220568-13		1	Euro/Alo HD	Case Red
5220564	1	2 PCS	Pin	D=35mm
5219100	2	2	Spacer	
5220569	3	1 PCS	Lever kit	
60014994-13	4	1	Tool carrier	Case Red
60021068	5	1 PCS	Pin kit	Replaces 9020072
1101035	6	1	Spring	
5023005	7	4	Greaser	M 10 x 1
5002972	8	2	Screw	M6S 10x40 Driloc

© 2025 Jost