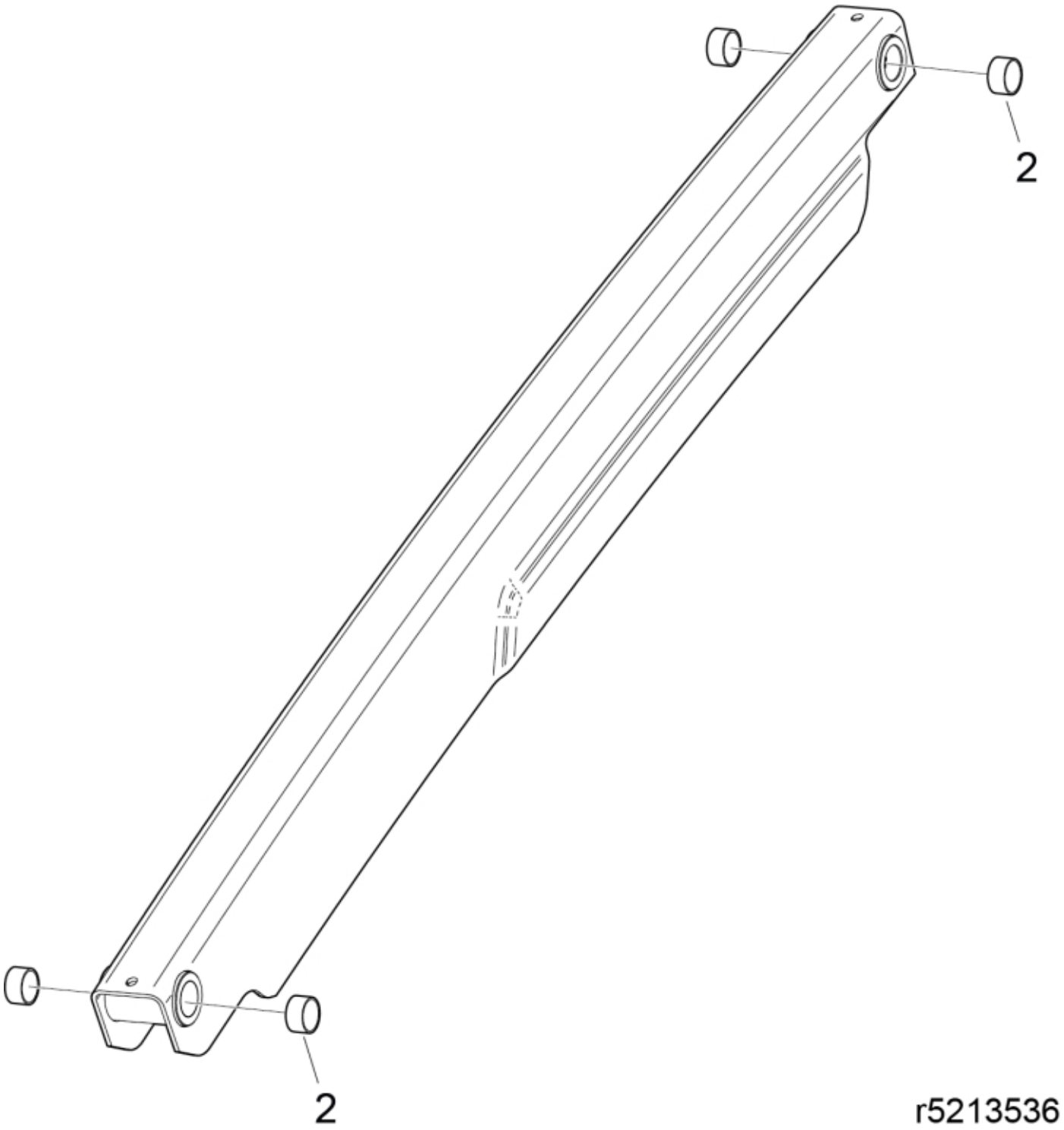



© 2025 Jost

**Part assemblies** Parallel rod w. bushings

| PartNo | Pos | Qty | Name | Specifications |
|---|---|---|---|---|
| 5018514 | 2 | 4 | Bushing | D35 L=20 |


© 2025 Jost