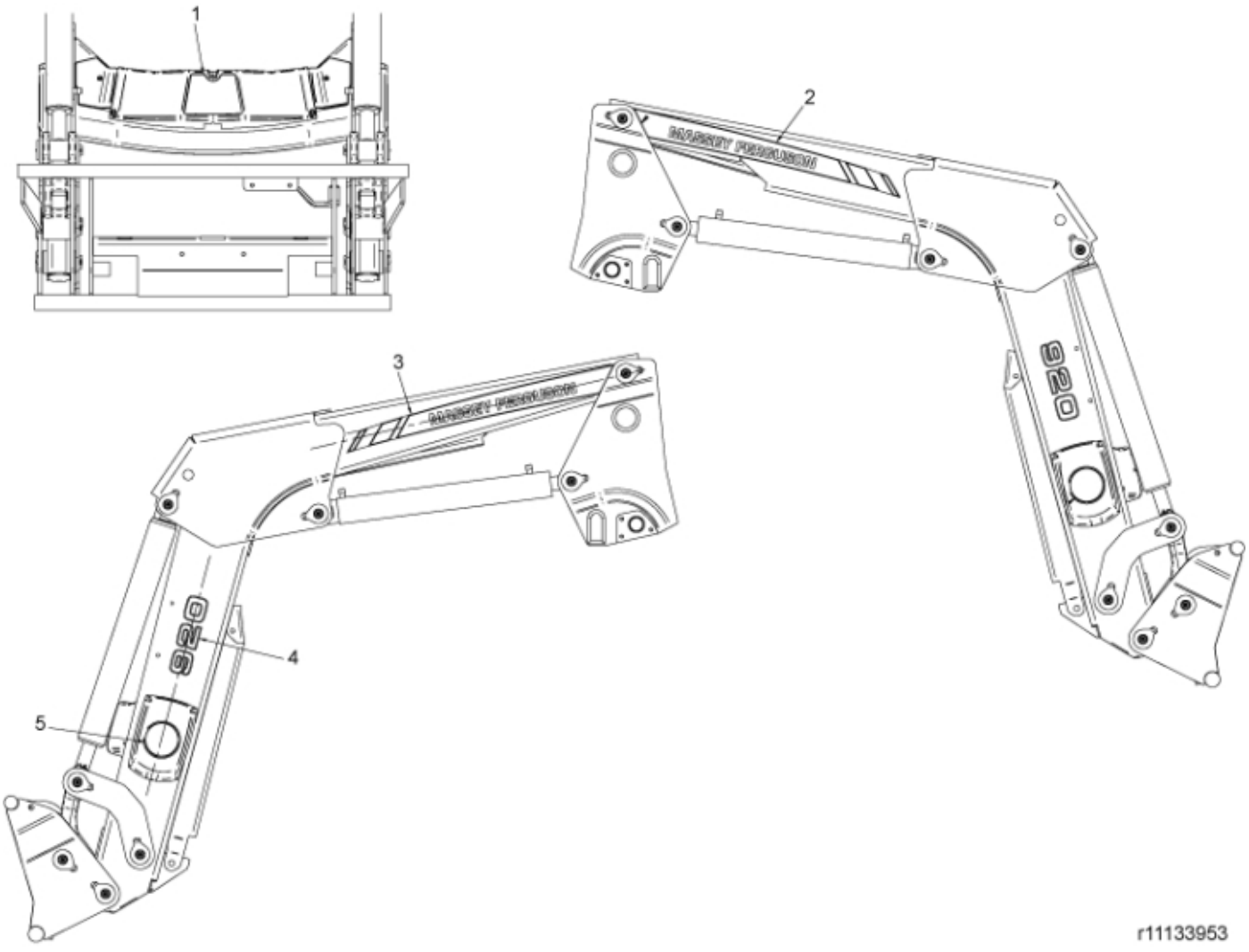

© 2025 Jost

Description	AGCO
Part assemblies	Decal kit MF920 NA

PartNo	Pos	Qty	Name	Specifications
11134981	1	1 PCS	Trapezoid decal	
11134978	2	1 PCS	Decal Brand, RH	
11134977	3	1 PCS	Decal Brand, LH	
11133968	4	2 PCS	Decal, Model	
11134979	5	2 PCS	Decal, Circular	MF

© 2025 Jost