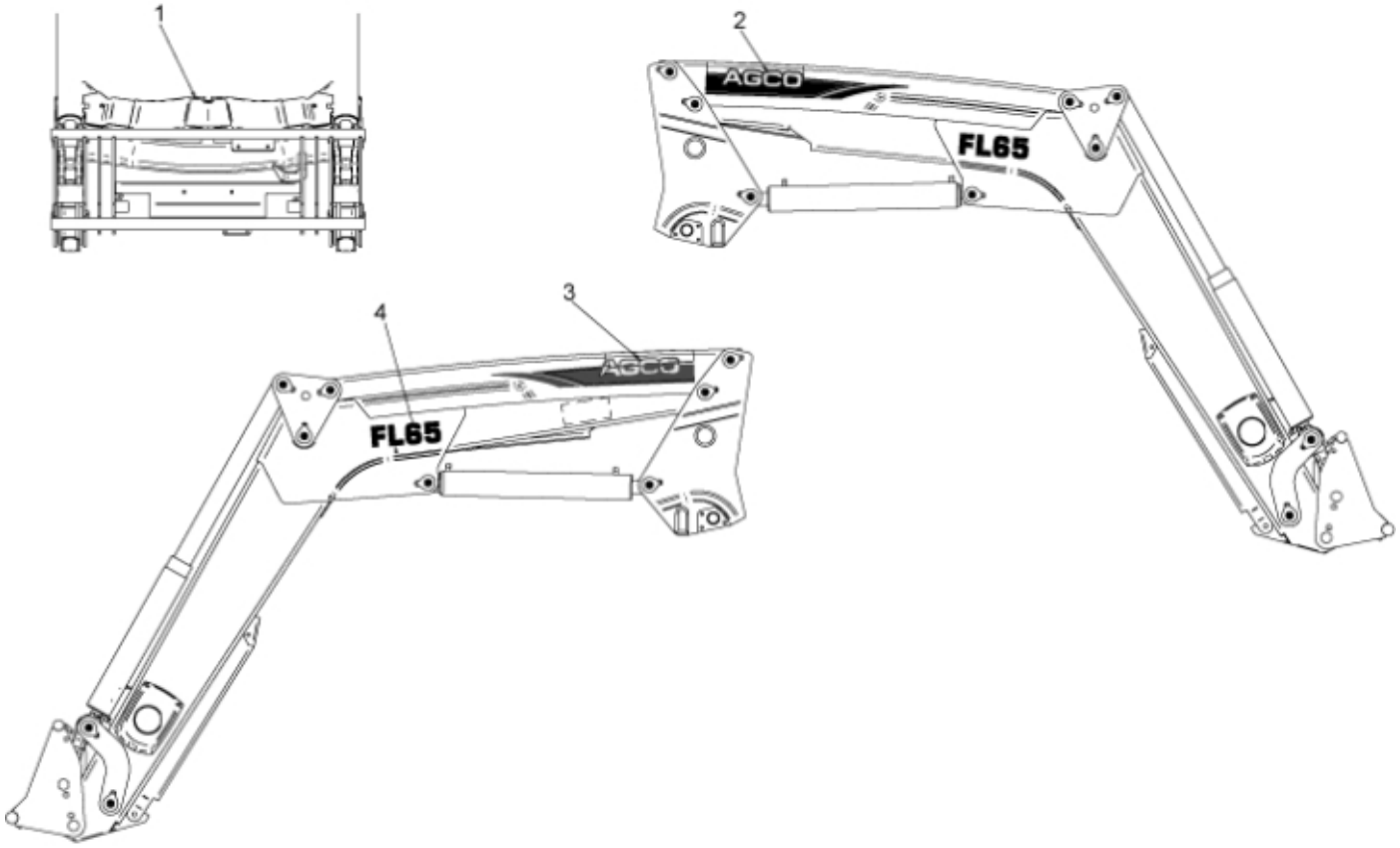

r4500222

© 2025 Jost

Description	AGCO
Part assemblies	Decal kit FL65

PartNo	Pos	Qty	Name	Specifications
11134462	1	1 PCS	Trapezoid decal	
11134757	2	1 PCS	Decal Brand, RH	
11134756	3	1 PCS	Decal Brand, LH	
11134751	4	2 PCS	Decal, Model	

© 2025 Jost