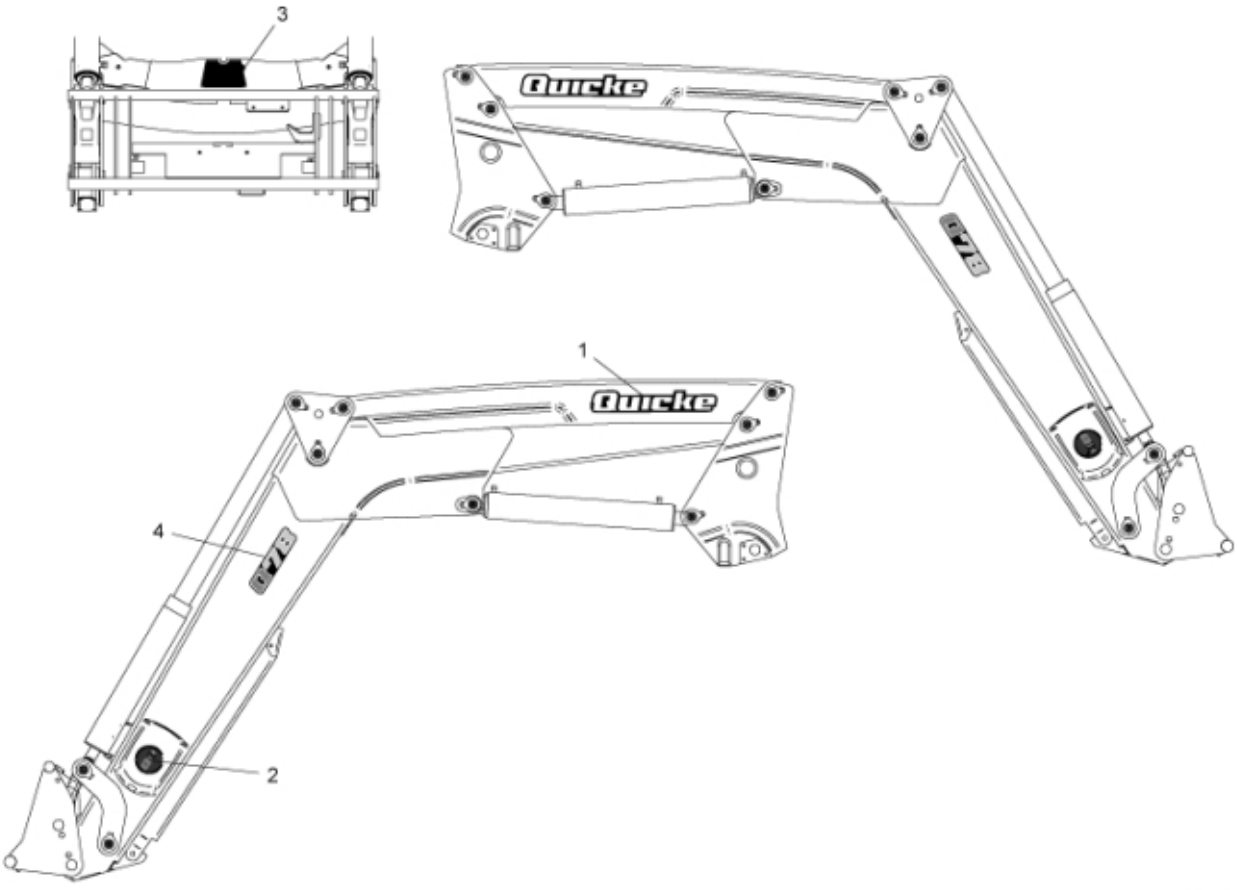

© 2025 Jost

Part assemblies	Decal kit Q78

PartNo	Pos	Qty	Name	Specifications
11135105	1	2 PCS	Quicke	
11135040	2	2	Decal, Circular	QD
11135041	3	1 PCS	QD	
11135388	4	2 PCS	Q78	

© 2025 Jost