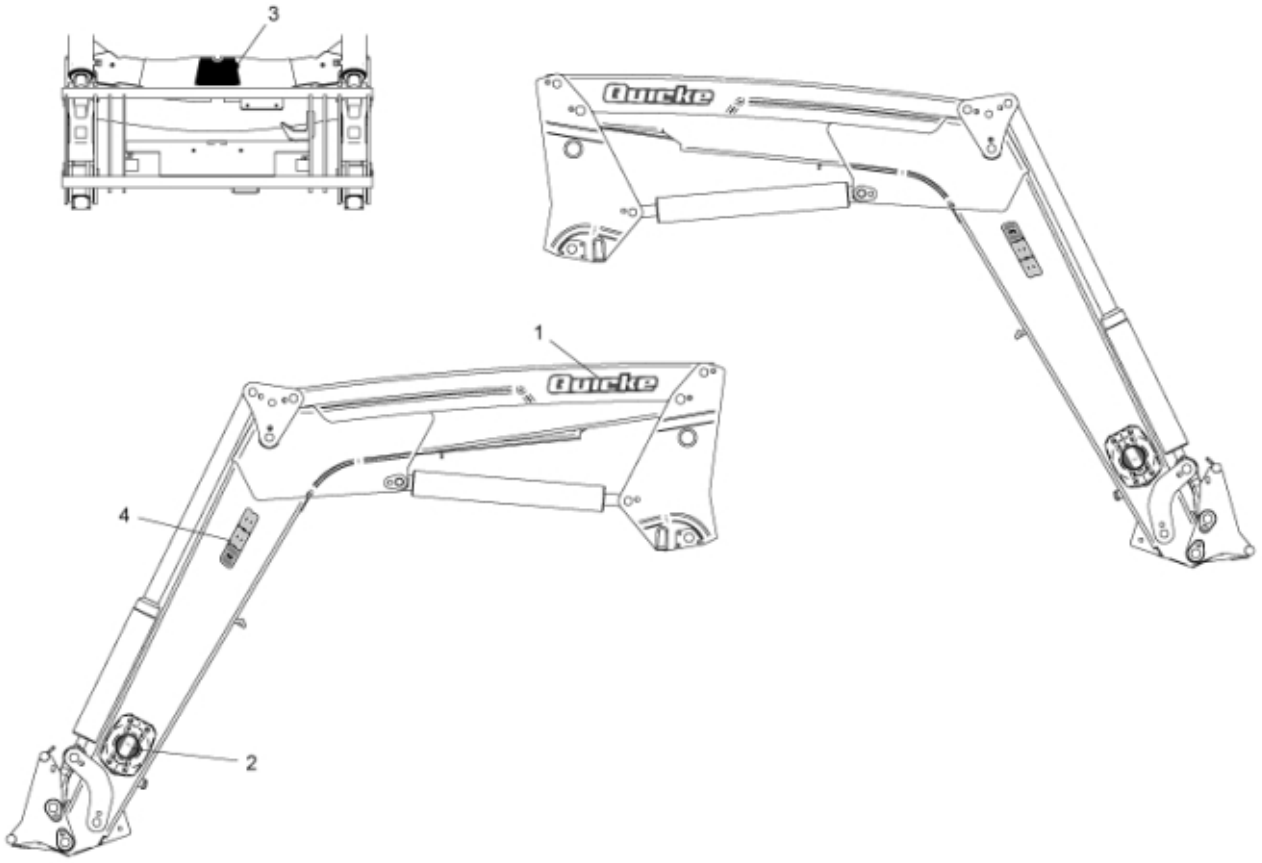

r4500580

© 2025 Jost

Part assemblies Decal kit Q88

PartNo	Pos	Qty	Name	Specifications
11135105	1	2 PCS	Quicke	
11135040	2	2	Decal, Circular	QD
11135041	3	1 PCS	QD	
11135389	4	2 PCS	Q88	

© 2025 Jost