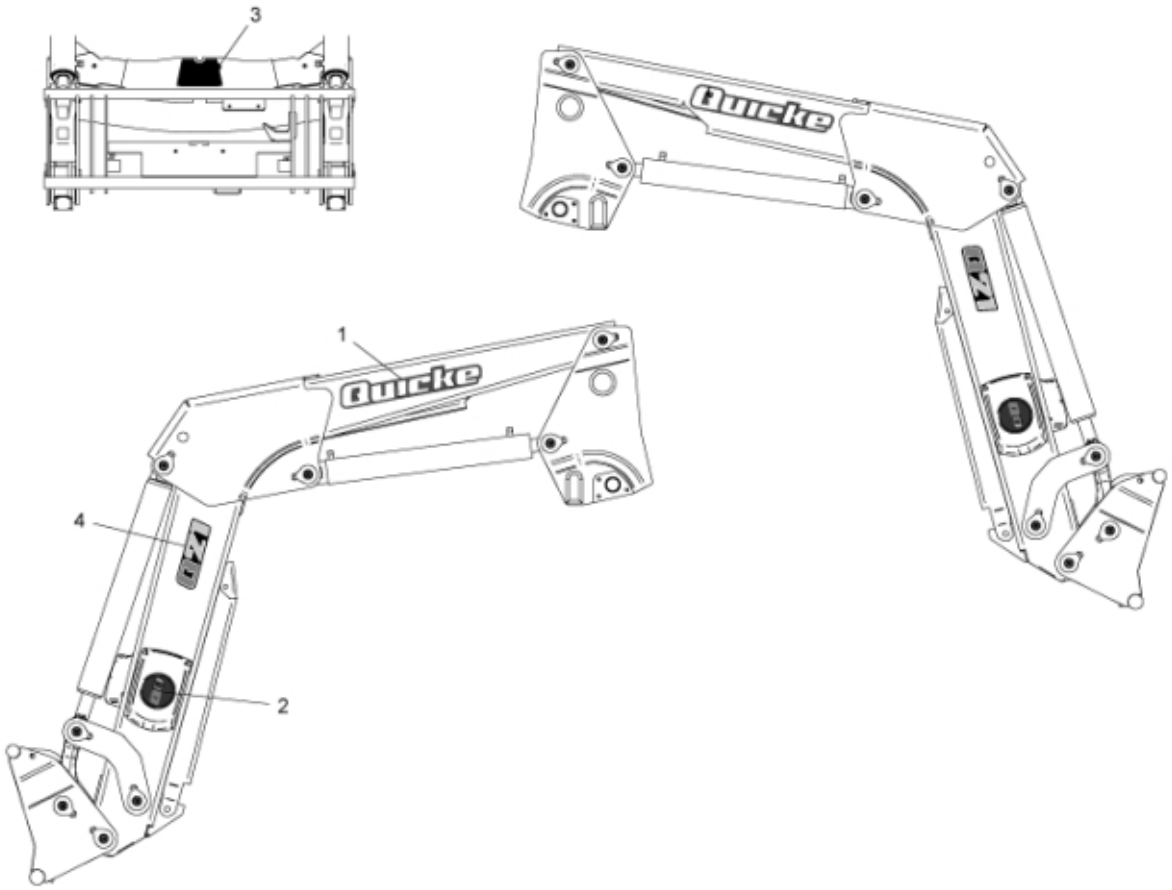

© 2021 Ålö

Part assemblies Decal kit Q21

PartNo	Pos	Qty	Name	Specification
11135039	1	2 PCS	Quicke	
11135040	2	2	Decal, Circular	QD
11135041	3	1 PCS	QD	
11135390	4	2 PCS	Q21	

© 2021 Ålö