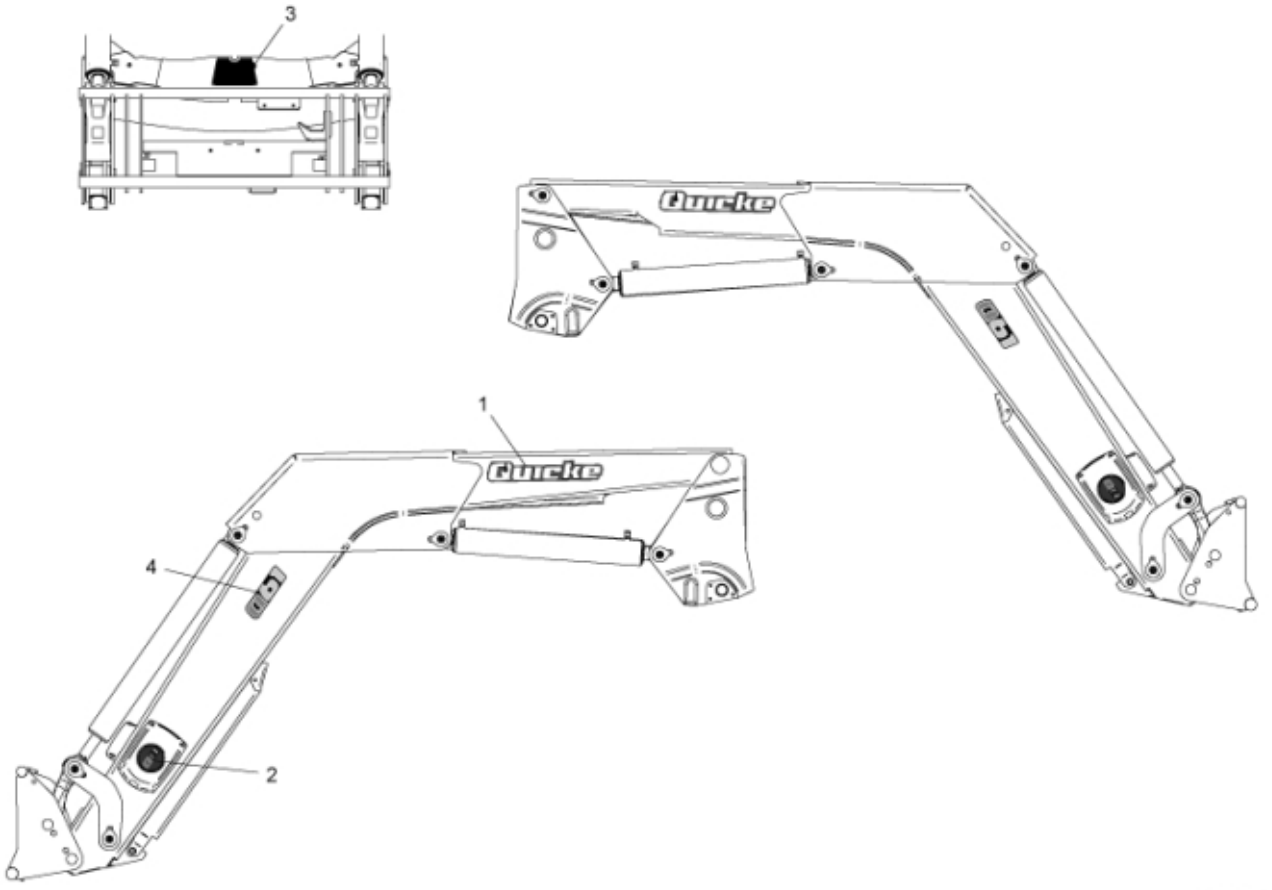

© 2025 Jost

Part assemblies Decal kit Q61

PartNo	Pos	Qty	Name	Specifications
11135039	1	2 PCS	Quicke	
11135040	2	2	Decal, Circular	QD
11135041	3	1 PCS	QD	
11135395	4	2 PCS	Q61	

© 2025 Jost