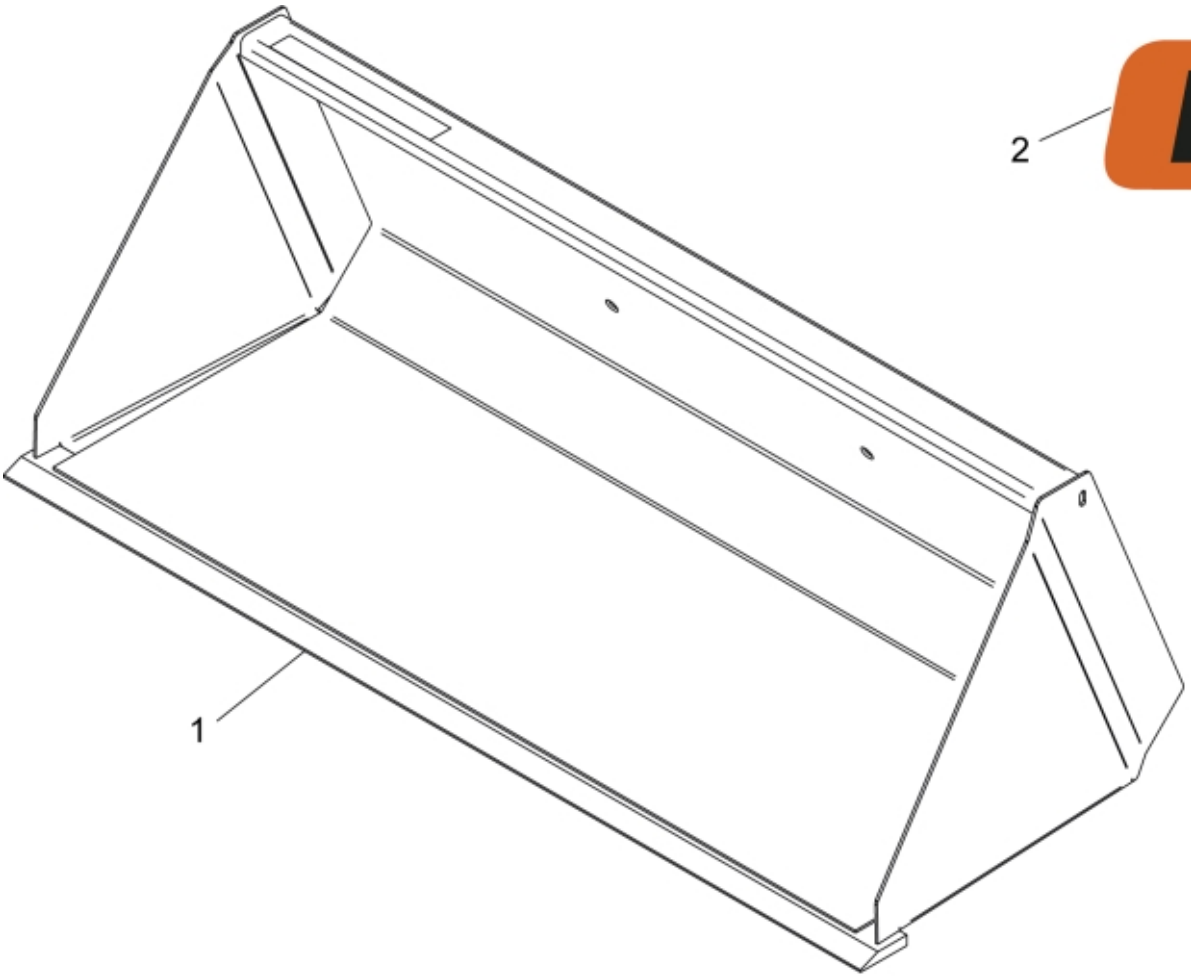


r11251941_948


© 2025 Jost

| | |
|---|---|
| **Part assemblies** | Bucket 185U Skid Steer |
| **Specification** | Year From: 5/1/2013 12:00:00 AM |
| | Year To: 6/30/2018 12:00:00 AM |

| PartNo | Pos | Qty | Name | Specifications |
|---|---|---|---|---|
| 11262120 | 1 | 1 | Cutting edge | |
| 60049053 | 2 | 2 | Decal | "Q" small 80x57 |


© 2025 Jost