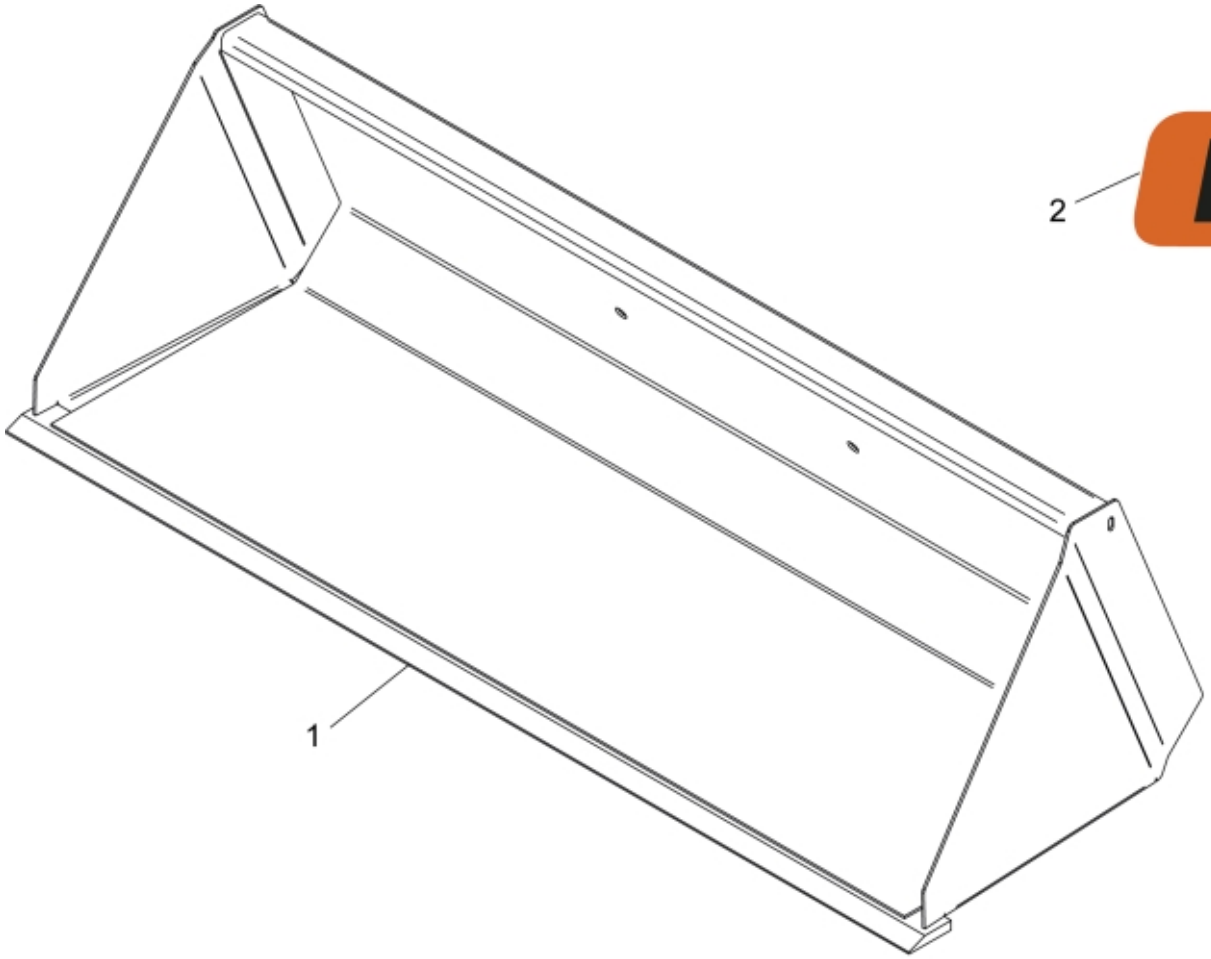

r11251951_958

© 2025 Jost

Part assemblies	Bucket 215U Euro
Specification	Year From: 5/1/2013 12:00:00 AM

PartNo	Pos	Qty	Name	Specifications
11262124	1	1	Cutting edge	
60049053	2	2	Decal	"Q" small 80x57

© 2025 Jost