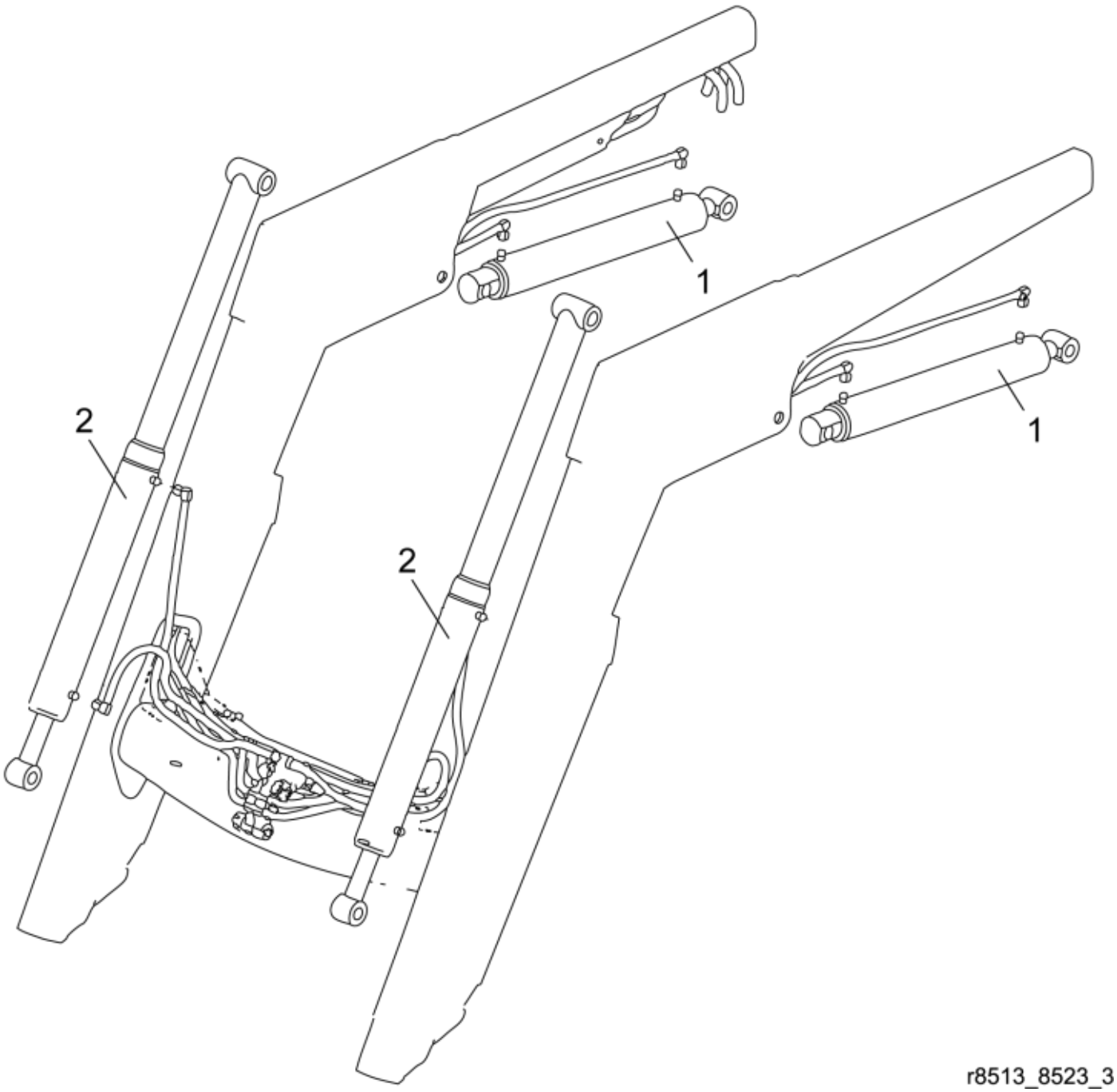

r8513_8523_3

© 2025 Jost

Part assemblies	Cylinder

PartNo	Pos	Qty	Name	Specifications
12711710-1	1	2	Lift Cylinder	Glossy Black
12721310-1	2	2 PCS	Tilt Cylinder	Glossy Black

© 2025 Jost