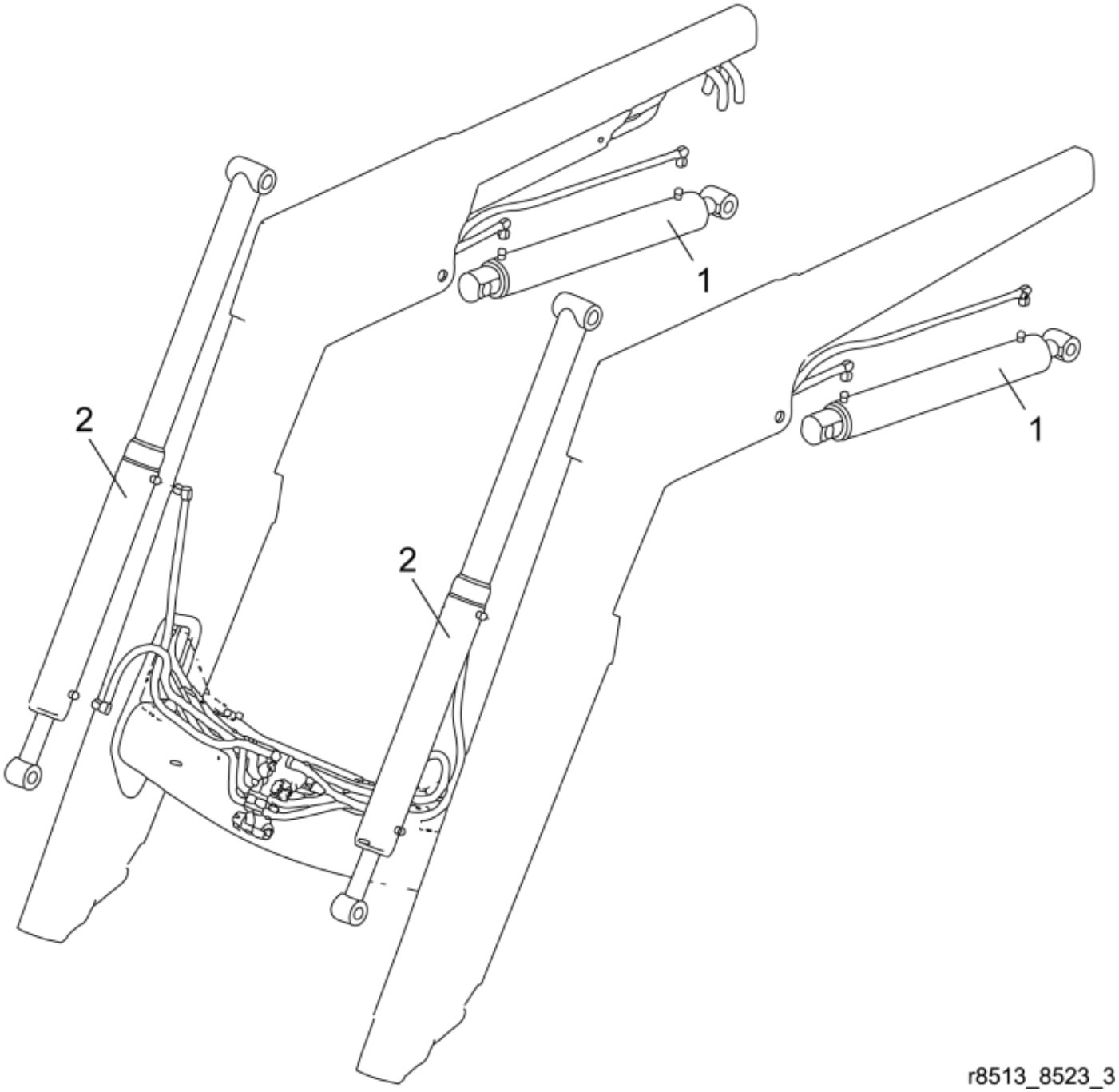

© 2021 Ålö

Part assemblies Cylinder

PartNo	Pos	Qty	Name	Specification
12711610-1	1	2	Cylinder	Alo Black
12720510-1	2	2 PCS	Cylinder	Alo Black

© 2021 Ålö