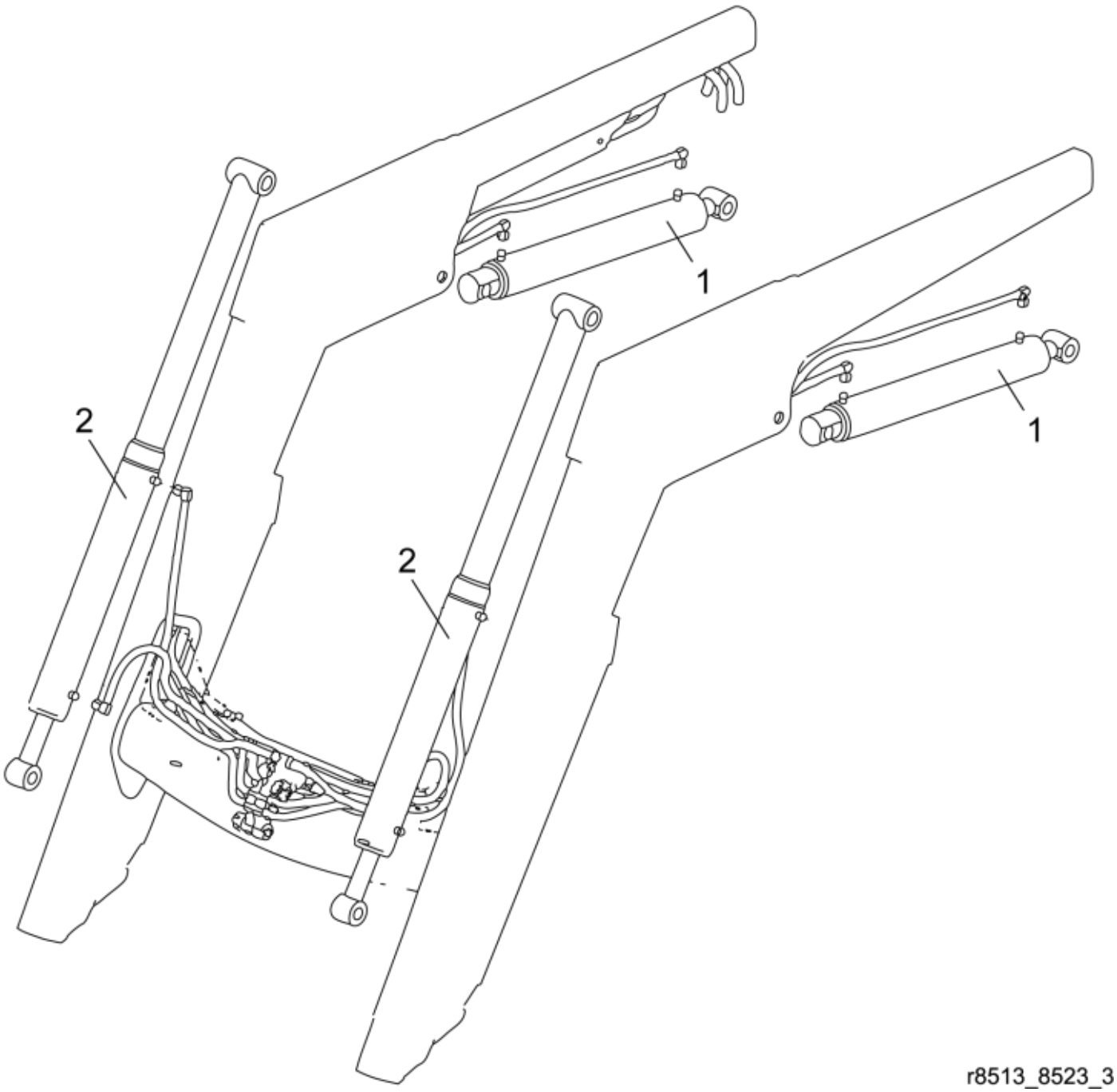


r8513_8523_3


© 2025 Jost

| | |
|---|---|
| **Part assemblies** | Cylinder |

Cylinder:Cylinder part number is written on the cylinder itself. Have a look before searching for parts.

| PartNo | Pos | Qty | Name | Specifications |
|---|---|---|---|---|
| 12713810-1 | 1 | 2 | Lift Cylinder | Glossy Black |
| 12712510-1 | 2 | 2 | Tilt Cylinder | Glossy Black |


© 2025 Jost