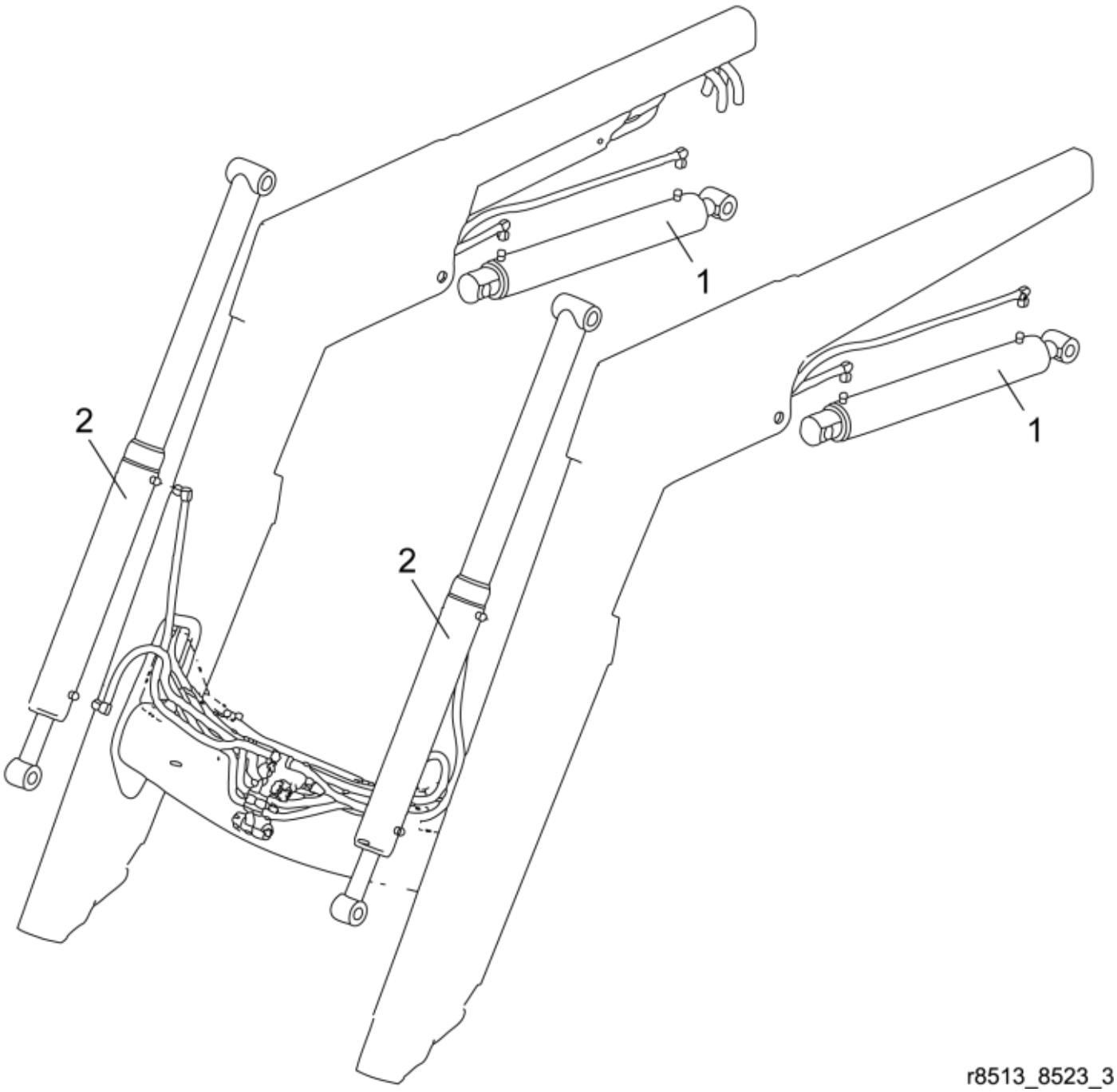

r8513_8523_3

© 2025 Jost

Part assemblies	Cylinder

Cylinder:Cylinder part number is written on the cylinder itself. Have a look before searching for parts.

PartNo	Pos	Qty	Name	Specifications
12711810-1	1	2	Lift Cylinder	Glossy Black
12721010-1	2	2 PCS	Tilt Cylinder	Glossy Black

© 2025 Jost