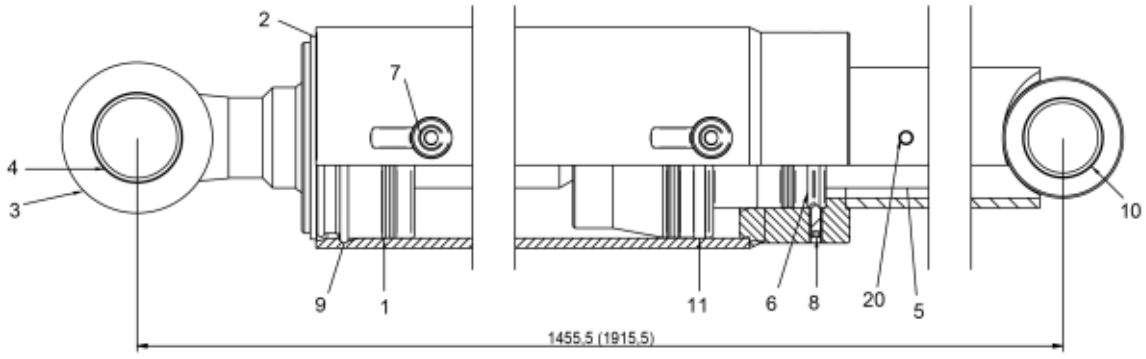
2
7
4
3
9
1
11
6
8
20
5
10
1455.5 (1915.5)

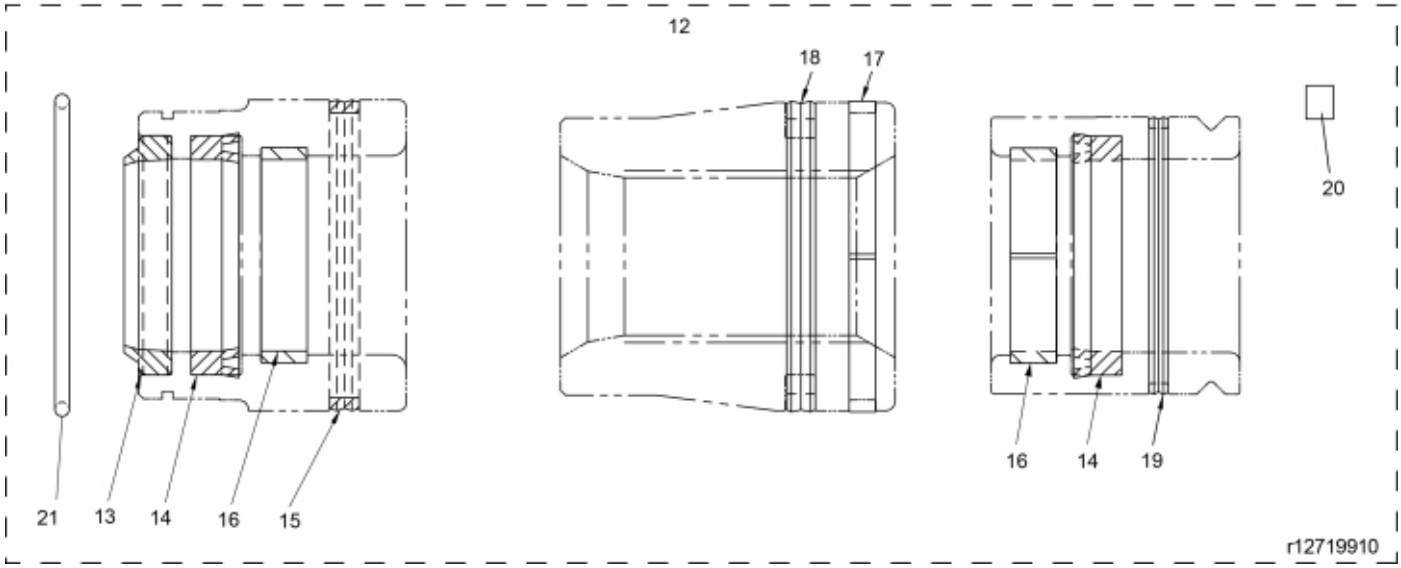
12
18
17
20
21
13
14
16
15
16
14
19
r12719910

© 2025 Jost

Description	85/40/40
Part assemblies	Tilt Cylinder
Specification	Specification: Glossy Black

PartNo	Pos	Qty	Name	Specifications
12708511	1	1	Bearing	D85/40
5016623	2	1	Retaining ring	
12713023	3	1	Piston rod cpl.	
5018513	4	2	• Bushing	D40 L=20
12700915	5	1	Rear rod	
12700017	6	1	Guide	
5026637	7	2	Plug	
5005983	8	2	Stop screw	S6SS M6x16
5016672	9	1	Retaining ring	
5018514	10	2	Bushing	D35 L=20
12708512	11	1	Piston	D85
5033715	12	1	Seal kit	
5040016	13	1	• Guide ring	85/80x5.5
5040010	14	2	• Guide ring	40/45x9,7
5038101	15	1	• Wiper	40/50x7/10
5040026	16	1	• Piston seal	85/69.5x6.3
5038254	17	2	• Seal	40/50x10
5039006	18	1	• Seal kit	85 x 78.6 x 6.4
5039001	19	1	• Seal kit	58 x 53.4 x 4.1
5022095	20	1	• Plug	
5037249	21	1	• O-ring	NBR 70Sh

© 2025 Jost