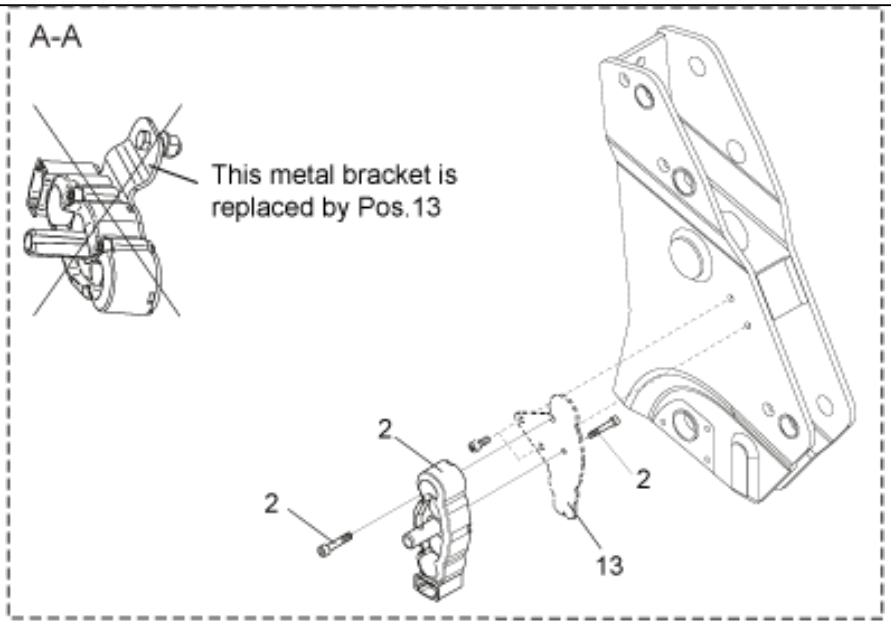
A-A
This metal bracket is
replaced by Pos.13
2
2
2
13

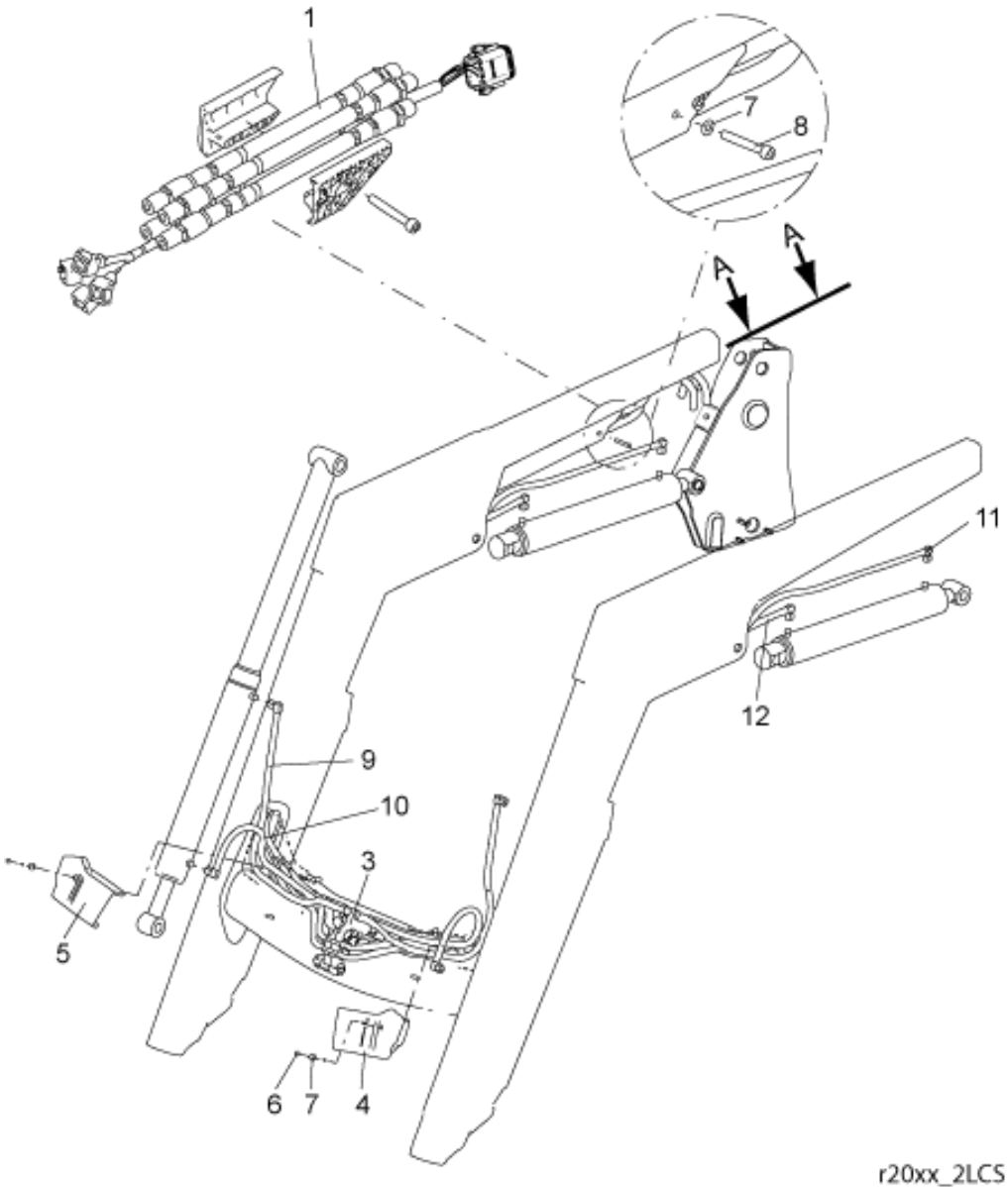
1
7
8
A
A
11
12
9
10
3
5
6
7
4
r20xx_2LCS

© 2025 Jost

Part assemblies Hydraulics LCS

PartNo	Pos	Qty	Name	Specifications
9032573	1	1 PCS	Main hose kit	Replaces 9031644
5034234	2	1	Parking support kit	Replaces 5034233, 5033972
10550510	3	1 PCS	Compact valve	7332744
5220601	4	1	Hose clamp LH	
5220603	5	1	Hose clamp RH	
5011910	6	2	Nut	
5013101	7	3	Washer	BRB 8,4 x 16
5005128	8	1	Screw	MC6S 8x60
9032605	9	2	Hose	3/8" L=1040mm (9031144)
9032631	10	2	Hose	3/8" L=750mm (9031148)
9032528	11	2 PCS	Hose	3/8" L=2070mm (9031131)
9032519	12	2 PCS	Hose	3/8" L=1550mm (9031121)
5034122	13	1 PCS	Bracket	

© 2025 Jost