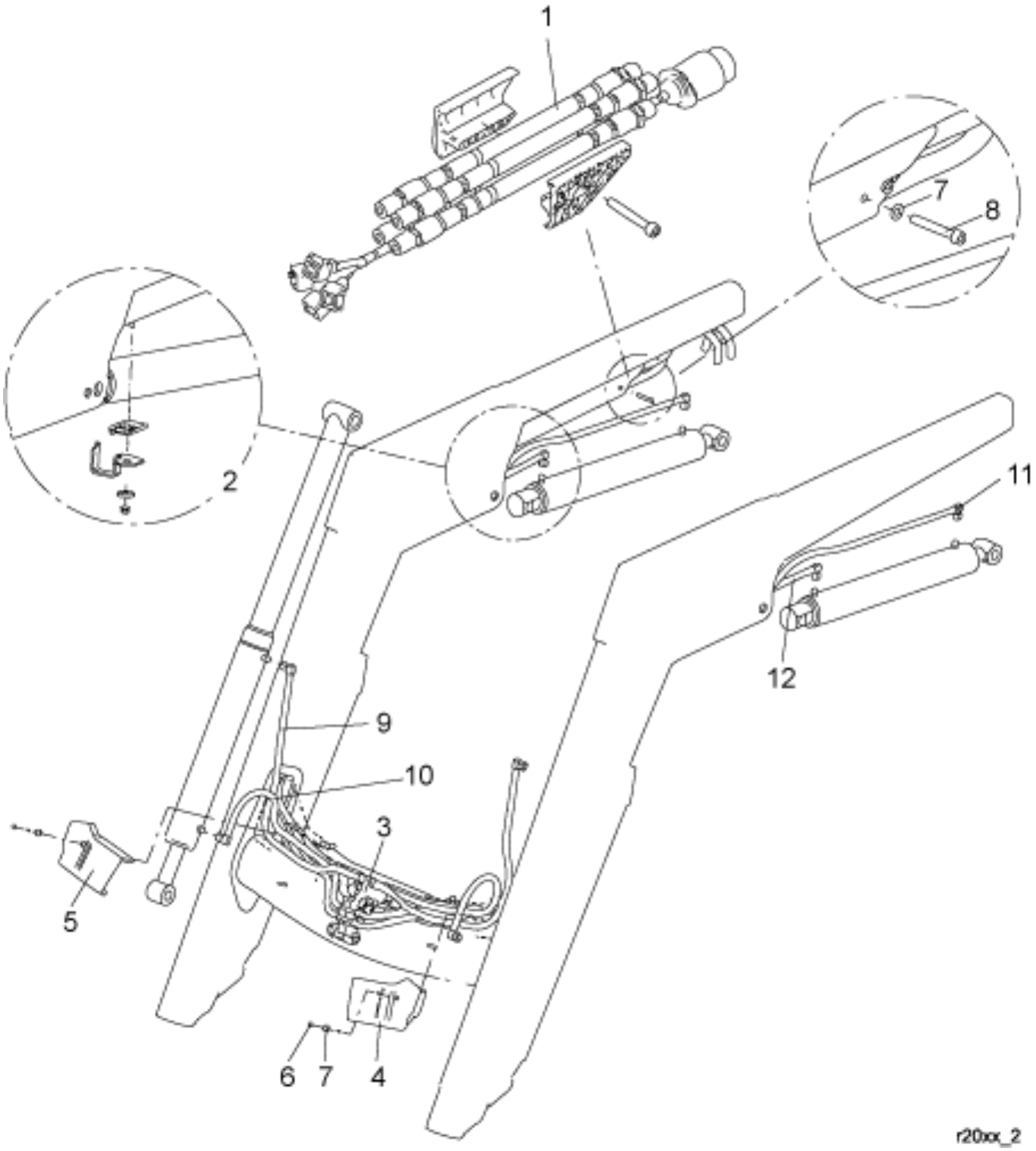

© 2025 Jost

Part assemblies Hydraulics

PartNo	Pos	Qty	Name	Specifications
9032553	1	1 PCS	Main hose kit	Replaces 9031311
5215167	2	1	Hose support	
10550510	3	1 PCS	Compact valve	7332744
5220601	4	1	Hose clamp LH	
5220603	5	1	Hose clamp RH	
5011910	6	2	Nut	
5013101	7	3	Washer	BRB 8,4 x 16
5005128	8	1	Screw	MC6S 8x60
9032605	9	2	Hose	3/8" L=1040mm (9031144)
9032631	10	2	Hose	3/8" L=750mm (9031148)
9032528	11	2 PCS	Hose	3/8" L=2070mm (9031131)
9032519	12	2 PCS	Hose	3/8" L=1550mm (9031121)

© 2025 Jost