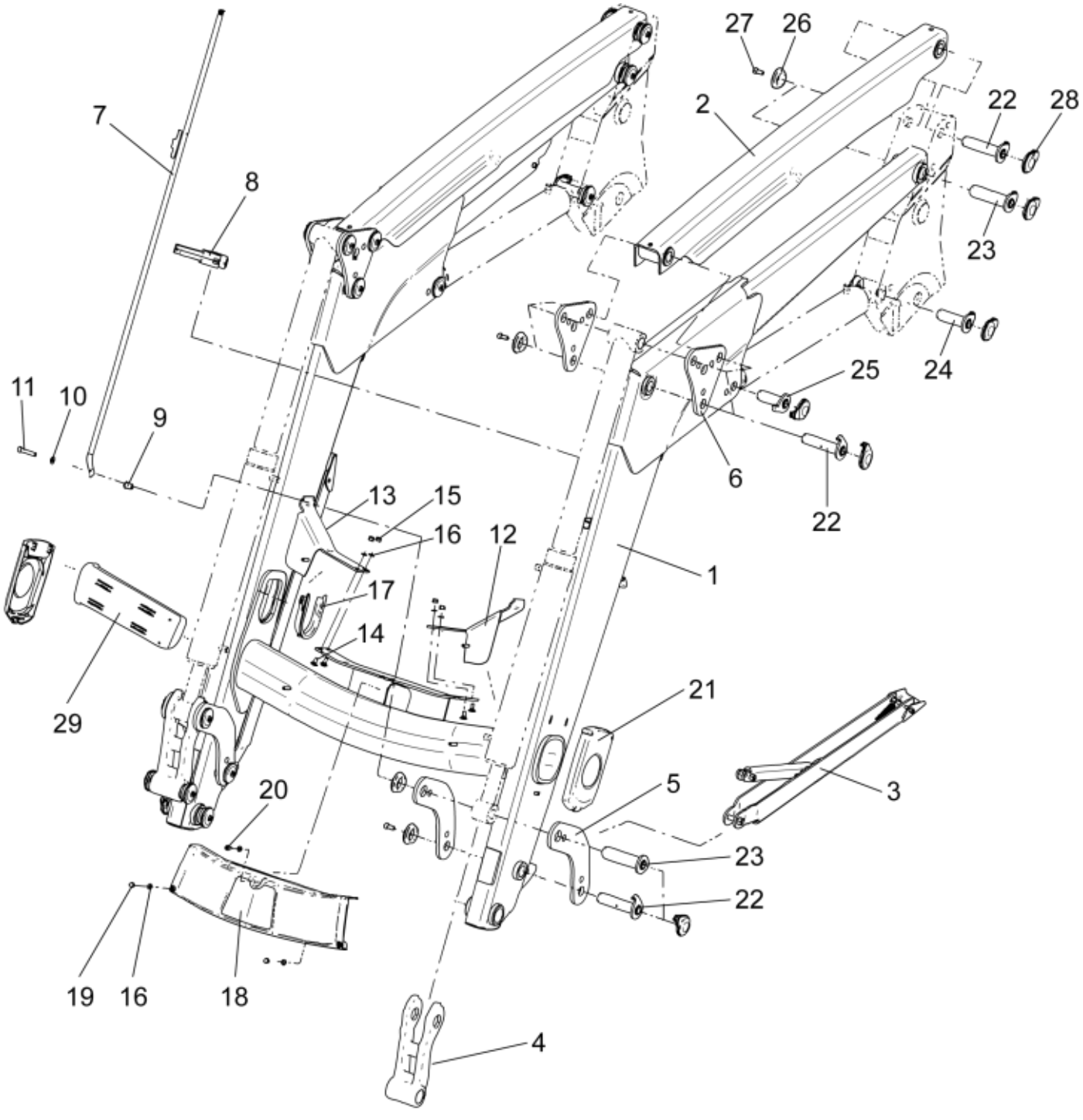

r8513_8523_1

© 2025 Jost

Part assemblies Loader beam

PartNo	Pos	Qty	Name	Specifications
5211761-7	1	1	Loader beam w. bushings	Grey
5213531-10	2	2	Parallel rod w. bushings	Silver
5218004-7	3	2	Support leg	Grey
5214831-1	4	2	Link w. bushings	Glossy Black
5214111-7	5	4	Link	Grey
5214126-7	6	2	Link pair	Grey
5215216	7	1	Indicator rod	
5215208	8	1	Holder kit	
5215227	9	1	Spacer	
5013110	10	1	Washer	BRB 10.5x22x2
5050605	11	1	Screw	MC6S 10x50 Loc
5211255	12	1	Bracket	
5211256	13	1	Bracket	
5006001	14	4	Screw	MVBF 8x20
5011553	15	4	Nut	M6M M8 Loc-king
5013101	16	5	Washer	BRB 8,4 x 16
5215101	17	2	Cover	
5215021	18	1	Cover	
5011910	19	4	Nut	
5002058	20	1	Screw	M6S 8x16
5215191	21	2	Cover	
60018046	22	10	Pivot Pin	D=30, L=127mm
60018053	23	4	Pivot Pin	D=35, L=127mm
60018047	24	2	Pivot Pin	D=30, L=96mm
60018050	25	2	Pivot Pin	D=30, L=84mm
5215131	26	22	Locking cover	
5050608	27	22	Screw	MC6S M10x20 Loc
5215121-1	28	22	Plastic cover	Glossy Black
5215181	29	1	Box	

© 2025 Jost