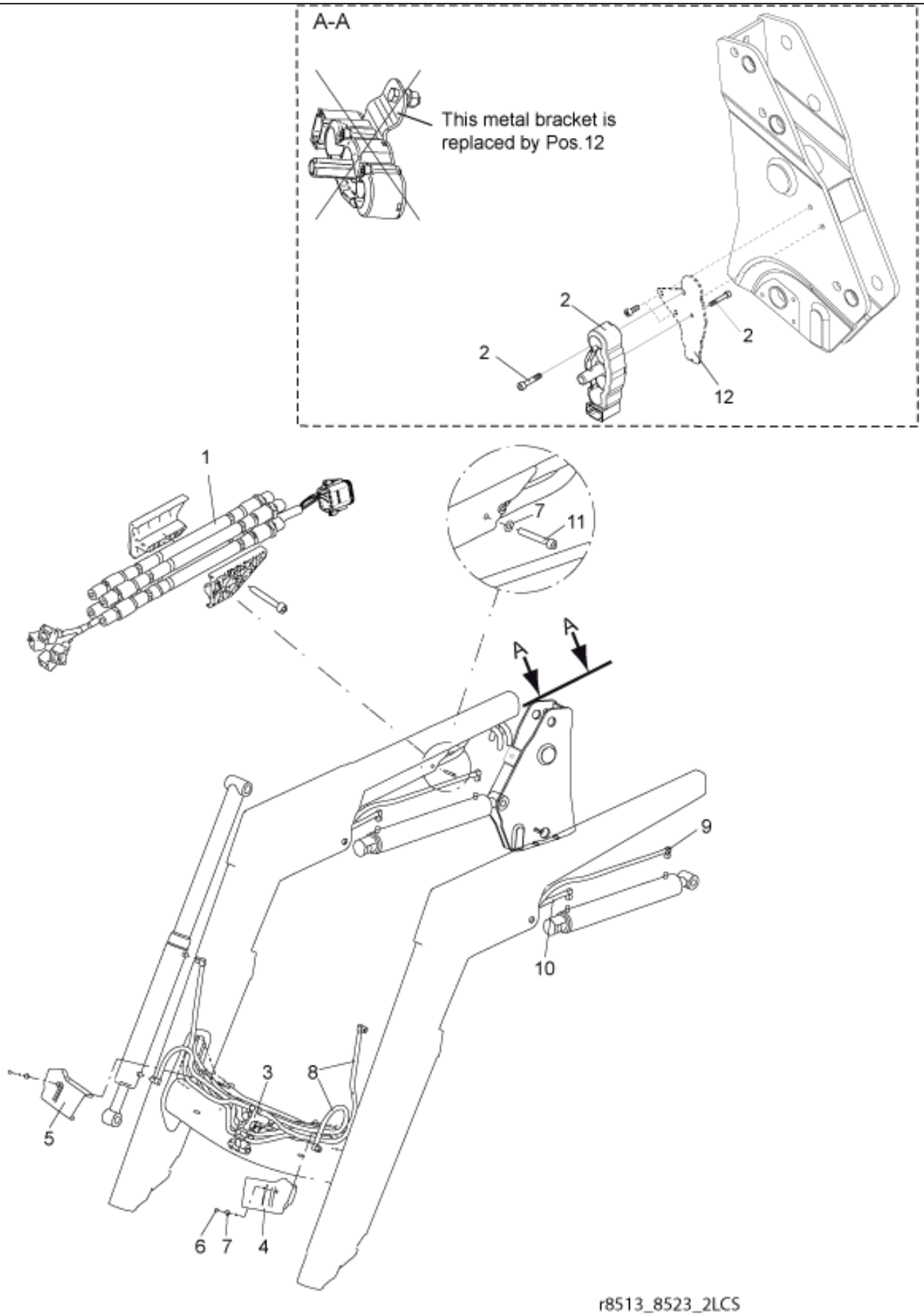
A-A
This metal bracket is
replaced by Pos.12
2
2
2
12
1
7
11
A
A
9
10
3
8
5
6
7
4
r8513_8523_2LCS


© 2025 Jost

**Part assemblies** Hydraulics LCS

| PartNo | Pos | Qty | Name | Specifications |
|---|---|---|---|---|
| 9032577 | 1 | 1 PCS | Main hose kit | Replaces 9031646 |
| 5034234 | 2 | 1 | Parking support kit | Replaces 5034233, 5033972 |
| 10550510 | 3 | 1 PCS | Compact valve | 7332744 |
| 5220601 | 4 | 1 | Hose clamp LH | |
| 5220603 | 5 | 1 | Hose clamp RH | |
| 5011910 | 6 | 2 | Nut | |
| 5013101 | 7 | 3 | Washer | BRB 8,4 x 16 |
| 9032603 | 8 | 4 PCS | Hose | 3/8" L=900mm (9031142) |
| 9032530 | 9 | 2 PCS | Hose | 3/8" L=2580mm (9031133) |
| 9032521 | 10 | 2 PCS | Hose | 3/8" L=1950mm (9031123) |
| 5005128 | 11 | 1 | Screw | MC6S 8x60 |
| 5034122 | 12 | 1 PCS | Bracket | |


© 2025 Jost