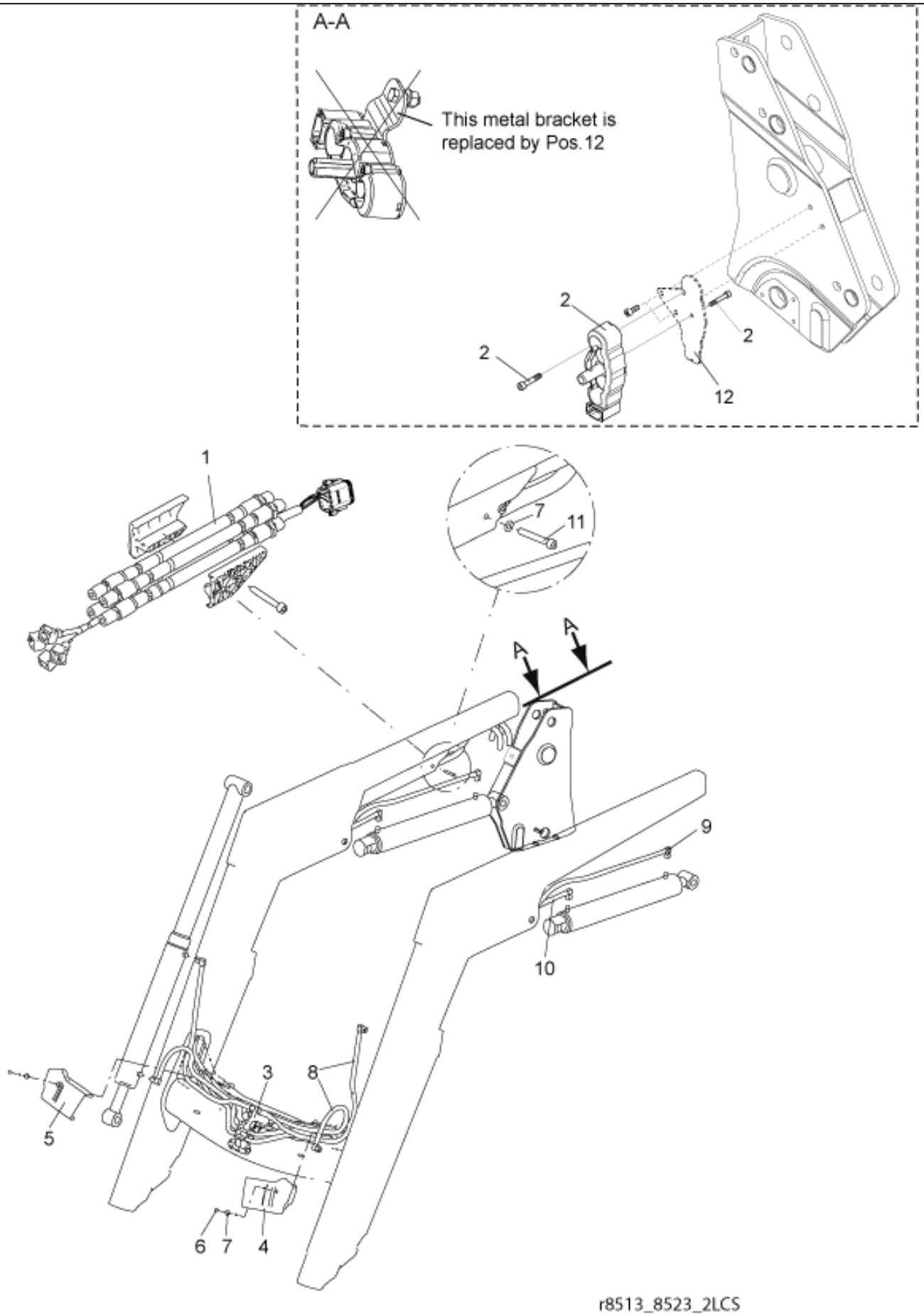
A-A
This metal bracket is
replaced by Pos.12
2
2
2
12
1
7
11
A
A
9
10
3
8
5
6
7
4
r8513_8523_2LCS

© 2025 Jost

Part assemblies Hydraulics LCS

PartNo	Pos	Qty	Name	Specifications
9032578	1	1 PCS	Main hose kit	Replaces 9031647
5034234	2	1	Parking support kit	Replaces 5034233, 5033972
10550510	3	1 PCS	Compact valve	7332744
5220601	4	1	Hose clamp LH	
5220603	5	1	Hose clamp RH	
5011910	6	2	Nut	
5013101	7	3	Washer	BRB 8,4 x 16
9032603	8	4 PCS	Hose	3/8" L=900mm (9031142)
9032531	9	2 PCS	Hose	3/8" L=2630mm (9031134)
9032522	10	2 PCS	Hose	3/8" L=2060mm (9031124)
5005128	11	1	Screw	MC6S 8x60
5034122	12	1 PCS	Bracket	

© 2025 Jost