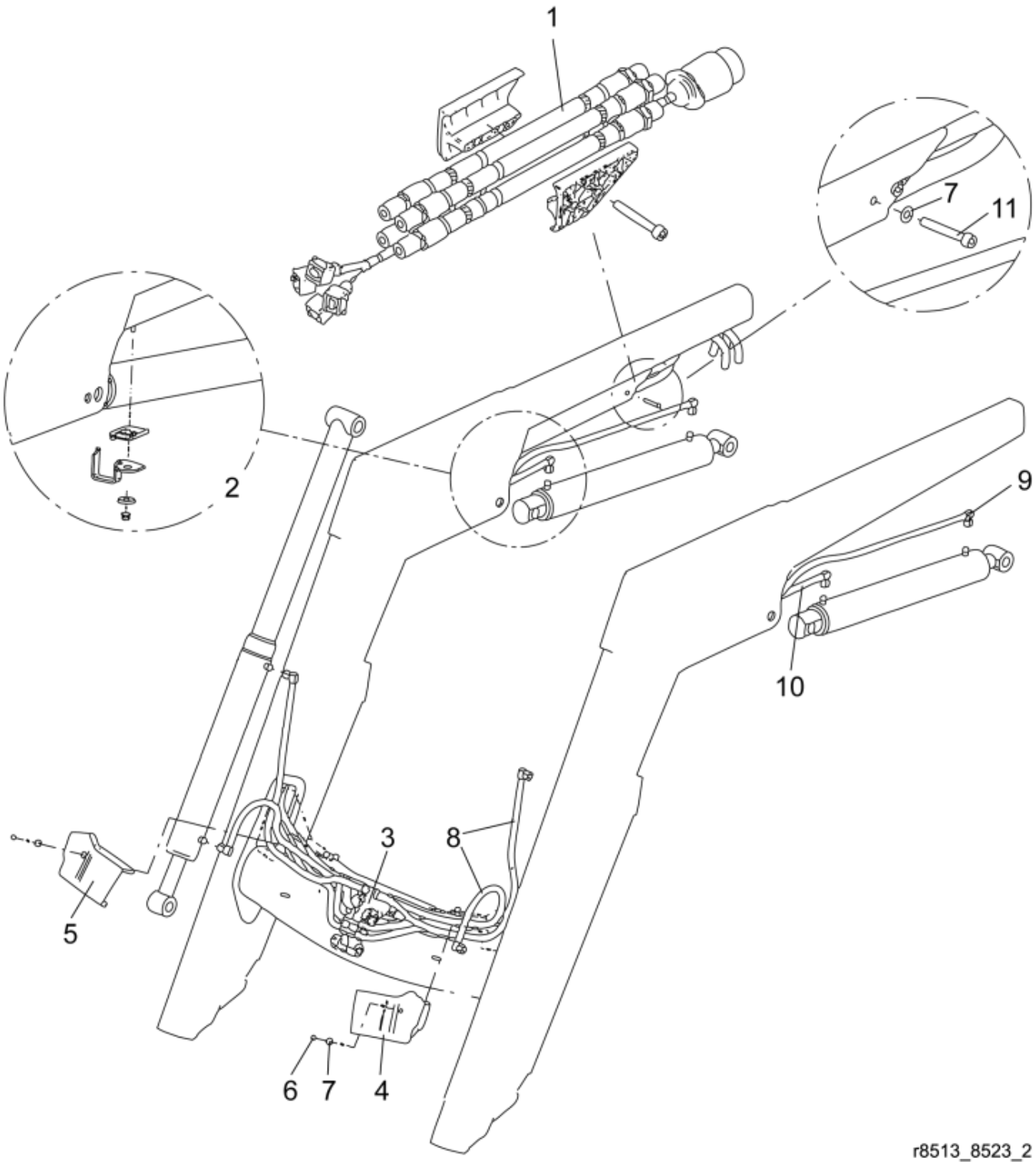

© 2025 Jost

Part assemblies Hydraulics

PartNo	Pos	Qty	Name	Specifications
9032557	1	1 PCS	Main hose kit	Replaces 9031315
5215167	2	1	Hose support	
10550510	3	1 PCS	Compact valve	7332744
5220601	4	1	Hose clamp LH	
5220603	5	1	Hose clamp RH	
5011910	6	2	Nut	
5013101	7	3	Washer	BRB 8,4 x 16
9032603	8	4 PCS	Hose	3/8" L=900mm (9031142)
9032532	9	2 PCS	Hose	3/8" L=2880mm (9031135)
9032523	10	2 PCS	Hose	3/8" L=2270mm (9031125)
5005128	11	1	Screw	MC6S 8x60

© 2025 Jost