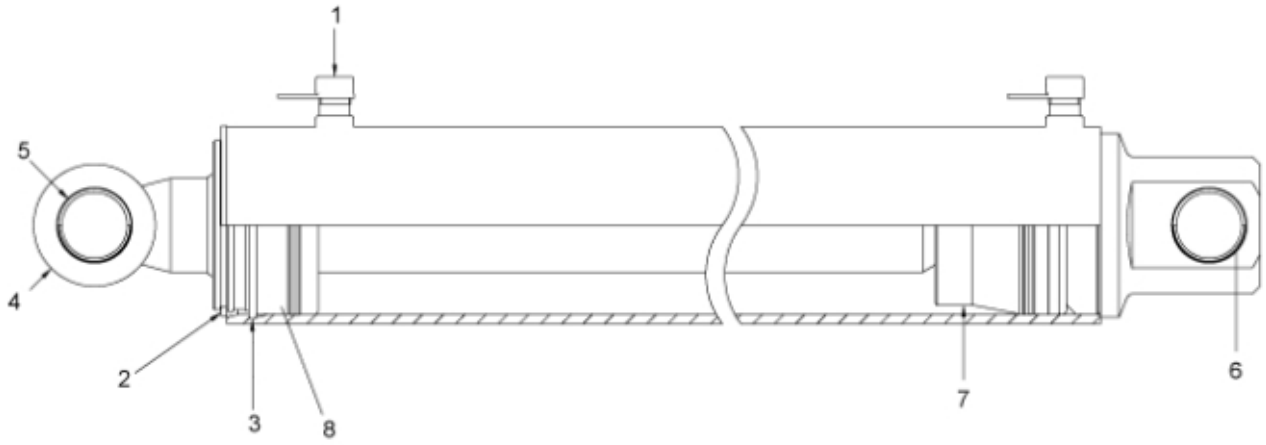

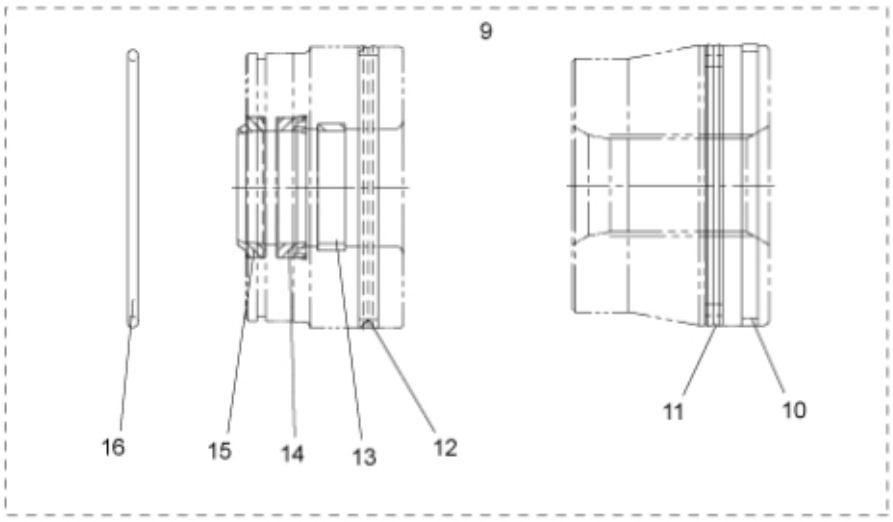

r12721210

© 2025 Jost

Description	95/50
Part assemblies	Lift Cylinder
Specification	Specification: Glossy Black

PartNo	Pos	Qty	Name	Specifications
5026637	1	2	Plug	
5040069	2	1	Retaining ring	
5040070	3	1	Retaining ring	
12712023	4	1	Piston rod cpl.	
5018514	5	2	• Bushing	D35 L=20
5018514	6	2	Bushing	D35 L=20
12720112	7	1	Piston	
12720111	8	1 PCS	Bearing	
5034163	9	1	Seal kit	
5040078	10	1	• Guide ring	95/5.5x2.5
5040079	11	1	• Piston seal	D95
5040068	12	1	• Seal kit	95x88.8x6.9
5040011	13	1	• Guide ring	50/55 x 9,7
5038256	14	1	• Seal	50/60 x 10
5038104	15	1	• Wiper	50/60 x 7/10
5039033	16	1 PCS	• O-ring	78.3x85.3x3.53

© 2025 Jost