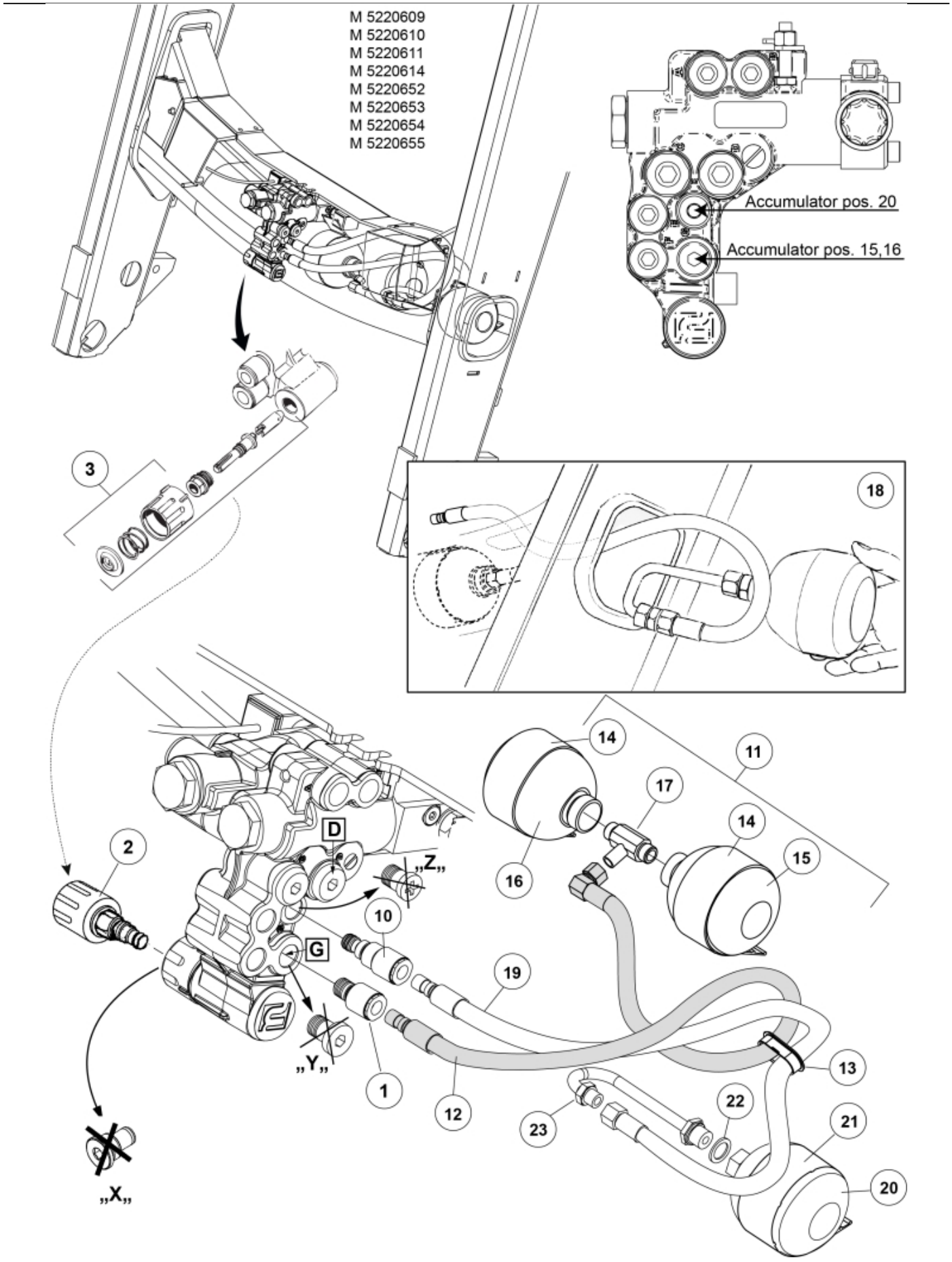
M 5220609
M 5220610
M 5220611
M 5220614
M 5220652
M 5220653
M 5220654
M 5220655
Accumulator pos. 20
Accumulator pos. 15,16
3
18
14
11
17
14
15
16
2
D
„Z„
10
G
19
„Y„
1
12
23
22
21
13
20
„X„

© 2025 Jost

Description	2 acc + Minus
Part assemblies	Suspension Man.
Specification	Serial number from: 7332744

PartNo	Pos	Qty	Name	Specifications
5220653		1 PCS	Suspension Man.	7332744
9031324	1	1	Coupling	3/8"
10550326	2	1	Shut-off valve	
10550327	3	1 PCS	• Knob	
11120622	10	1 PCS	Adaptor	
9031322	11	1 PCS	SoftDrive	
9031147	12	1	• Hose	3/8" L=800mm
5215111	13	1	• Edge cover	
5215012	14	2	• Bracket	
5033773	15	1	• Accumulator	0,5L/22Bar
5034102	16	1	• Accumulator	
11120516	17	1	• T-Adapter	
9031892	18	1 PCS	SoftDrive	for DM Loaders
9031871	19	1 PCS	• Hose	3/8" L=670mm
5034102	20	1	• Accumulator	
5215012	21	1	• Bracket	
5013853	22	1	• Dowty washer	Tredo 1/2", Part is included in kit 60007907 Hose cpl., 9032177 Hose cpl.
11120620	23	1 PCS	• Adaptor	

© 2025 Jost