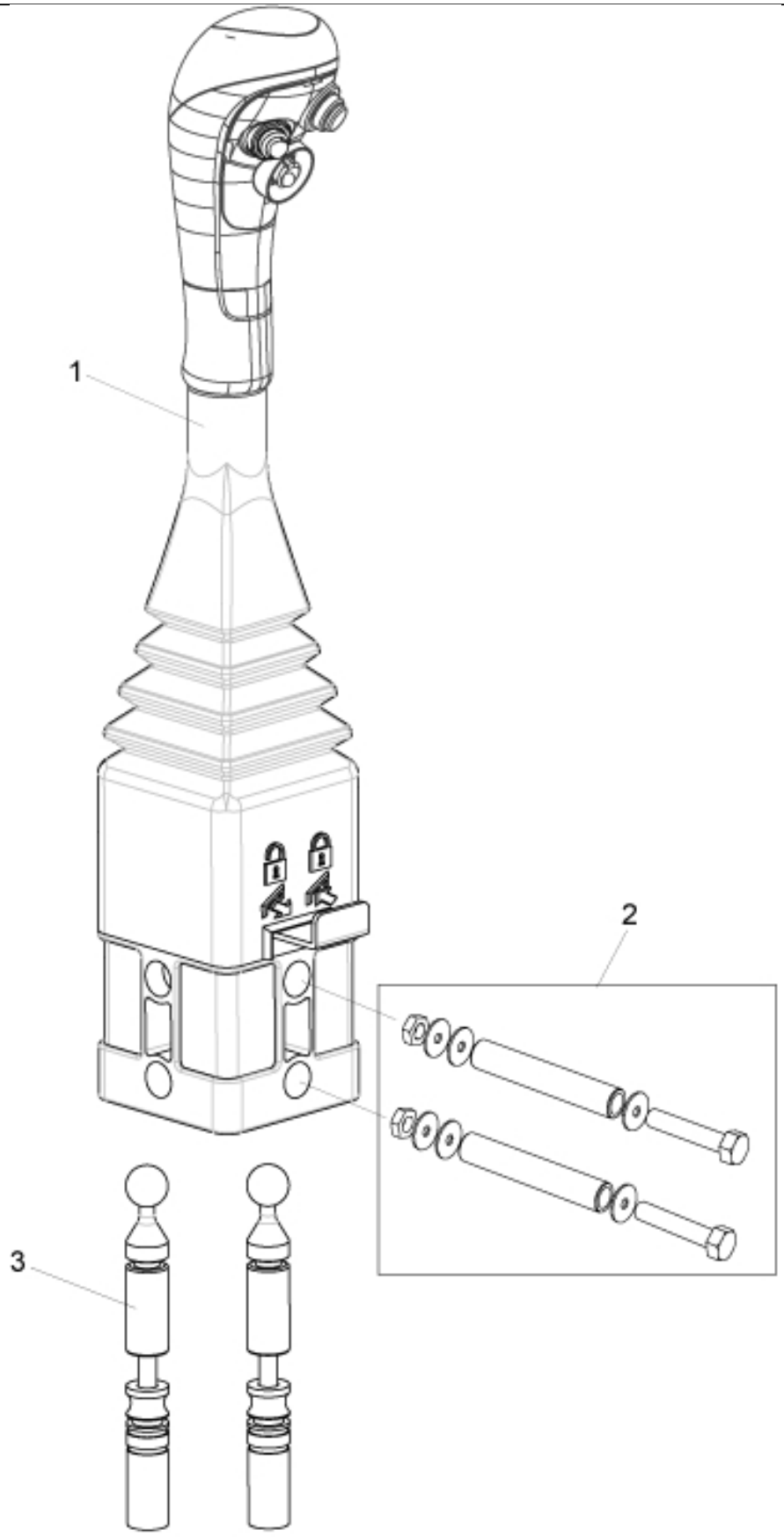

5021053a Lever kit 2+1

© 2025 Jost

Description	LCS
Part assemblies	Lever kit RH (2400mm)

PartNo	Pos	Qty	Name	Specifications
5021048	1	1 PCS	Control lever RH	
5220354	2	1	Screw kit	Part is included in kit 5021158 Lever kit (2000mm)
59035240	3	2	Control cable LCS	L=2400mm

© 2025 Jost