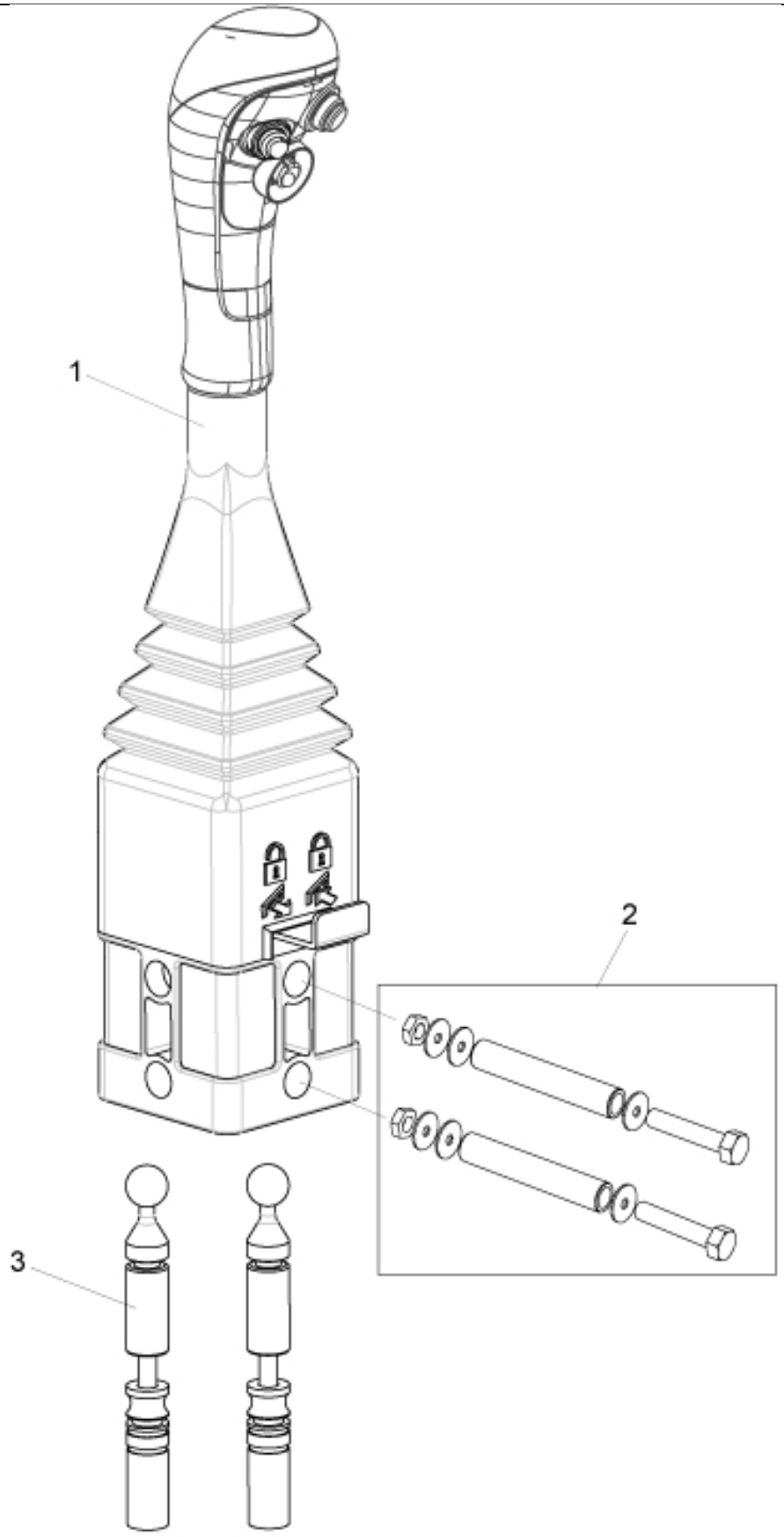


5021053a Lever kit 2+1


© 2025 Jost

| | |
|---|---|
| **Description** | LCS |
| **Part assemblies** | Lever kit RH (1200mm) |

| PartNo | Pos | Qty | Name | Specifications |
|---|---|---|---|---|
| 5021048 | 1 | 1 PCS | Control lever RH | |
| 5220354 | 2 | 1 | Screw kit | Part is included in kit 5021158 Lever kit (2000mm) |
| 5021026 | 3 | 2 | Control cable LCS | L=1200mm |


© 2025 Jost