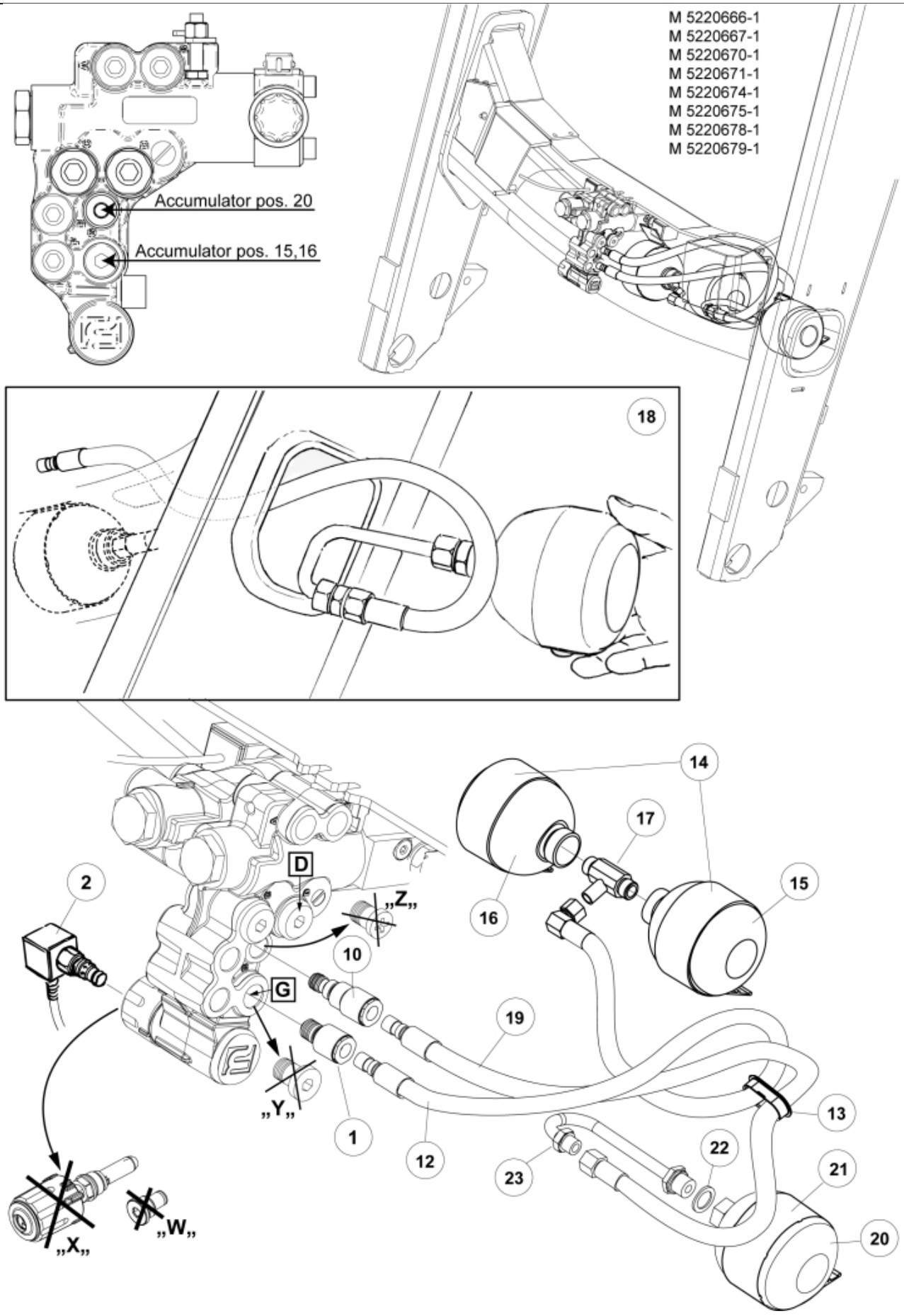
M 5220666-1
M 5220667-1
M 5220670-1
M 5220671-1
M 5220674-1
M 5220675-1
M 5220678-1
M 5220679-1
Accumulator pos. 20
Accumulator pos. 15,16
18
14
17
15
16
2
D
„Z„
10
G
19
„Y„
1
12
23
22
21
13
20
„X„
„W„

© 2025 Jost

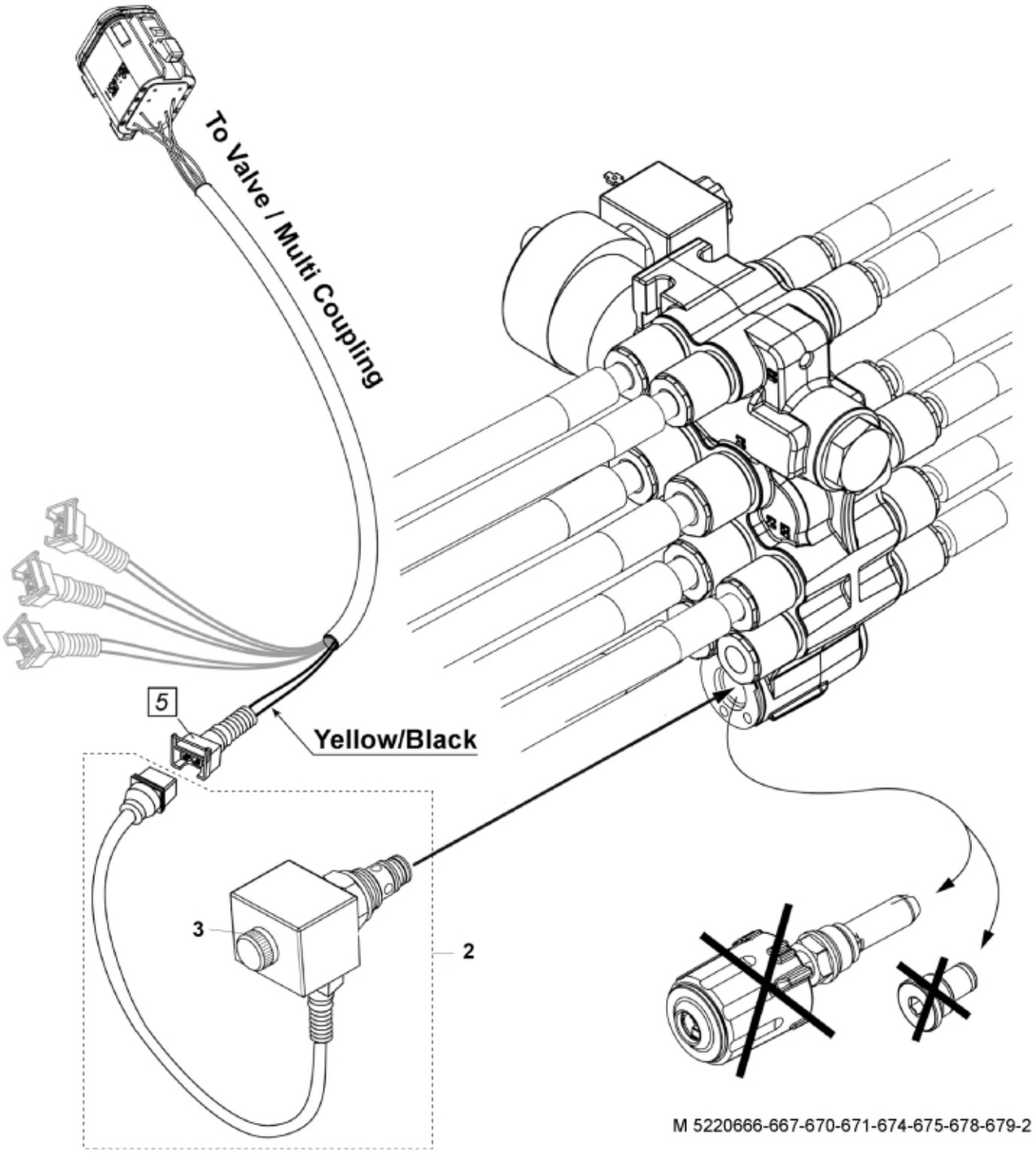

M 5220666-667-670-671-674-675-678-679-2

© 2025 Jost

Description	2 acc + Minus
Part assemblies	Suspension El. LCS
Specification	Serial number from: 7332744

PartNo	Pos	Qty	Name	Specifications
5220674		1 PCS	Suspension El. LCS	7332744
9031324	1	1	Coupling	3/8"
10550264	2	1 PCS	Valve cpl.	
60062558	3	1 PCS	• Coil	
5033621	6	1	Cable tie	4.6x150
11120622	10	1 PCS	Adaptor	
9031323	11	1 PCS	SoftDrive	
9031147	12	1	• Hose	3/8" L=800mm
5215111	13	1	• Edge cover	
5215013	14	2	• Bracket	
5033773	15	1	• Accumulator	0,5L/22Bar
5034102	16	1	• Accumulator	
11120516	17	1	• T-Adapter	
9031893	18	1 PCS	SoftDrive	
9031871	19	1 PCS	• Hose	3/8" L=670mm
5034102	20	1	• Accumulator	
5215013	21	1	• Bracket	
5013853	22	1	• Dowty washer	Tredo 1/2", Part is included in kit 60007907 Hose cpl., 9032177 Hose cpl.
11120620	23	1 PCS	• Adaptor	

© 2025 Jost